Ref:	**139797**
Version:	1.1
Date:	June 2015

Appendix H

Network Rail - Signalling Design Group (SDG) Signalling Feasibility Report

This page left deliberately blank

NetworkRail

Signalling Design Group

Ref	SDG/SFR/139797/GS2
Issue	2.00
Date	5 February 2015

MetroWest Phase 2

Signalling Feasibility Report

Project: Metrowest Phase 2	Business Unit: Infrastructure Projects
Sponsor: Andrew Holley	CCMS No.: TBC
Project Manager: Rachel Leighfield Finch	Project No.: 139797
Client: South Gloucestershire Council	GRIP Stage: 2
Signature	
Produced By	Name: Tony Jordan
	Job Title: Signalling Design Manager
	Date: 05·02·15
Checked By	Name: Peter Letman
	Job Title: Signalling Principles Designer
	Date: 05-02-15
Approved By	Name: Tony Jordan
	Job Title: Signalling Design Manager
	Date: 05·02·15
Accepted By	Name: Steve Baker
	Job Title: Designated Project Engineer
	Date:

This document is the property of Network Rail. It shall not be reproduced in whole or part nor disclosed to a third party without the written permission of the owner.
© Copyright 2015 Network Rail

Contents

1 Introduction 4
2 Design Parameters 4
3 Circular Route Option 6
4 Spur Line Option 13
5 Yate Turnback Option 19
6 Conclusion 21
Appendix A: Hallen Marsh Option 2.2 Sketch 22
Appendix B: Signal Sighting 23
Appendix C: SEU Count 27
Appendix D: Abbreviations 30

Issue Record

Issue	Date	Comments
0.01	28.10.14	Initial draft
0.02	01.12.14	Revised draft. Issued for estimating purposes.
0.03	11.12.14	Revised draft. Yate option updated. Issued for estimating purposes.
0.04	11.12.14	Revised draft. Hallen Marsh option updated. Issued for estimating purposes.
1.00	05.01.15	First issue.
2.00	05.02.15	Minor update.

References

1. Contract Requirements, GRIP Stage 2 – Feasibility, 139797, MetroWest Phase 2 v.1.0
2. Group Strategy – Capability Analysis, Report v.1.0
3. Various Five Mile Plans
4. Sectional Appendix
5. Special Instructions to the Signallers at St Andrews Junction
6. St Andrews Junction SSI Data Link Schematics (S627/36/01-14)
7. Signalling Sketches:
   - Circular Route Scheme Sketch (SDG/SSK/139797/GS2/1-3 v.1.0)
   - Spur Option Scheme Sketch Sketch (SDG/SSK/139797/GS2/4 v.1.0)
   - Yate Turnback Option Scheme Sketch (SDG/SSK/139797/GS2/5 v.1.0)
8. Outline Civil/Track Design:
   - Henbury Station Option 1A (Out & Back) and Option 1B (Loop) Eastern Location (47072043-SW-PW-DRG-7001 v.P04)
   - Henbury Station Option 2A (Out & Back) and Option 2B (Loop) Western Location (47072043-SW-PW-DRG-7002 v.P03)
   - North Filton Station (47072043-SW-PW-DRG-7003 v.P03)
   - Hallen Marsh Jcn Potential Enhancement To Facilitate Passenger Services To Henbury & Bristol Temple Meads (47072043-SW-PW-DRG-7004 v.P05)
   - Yate Turnback (47072043-SW-PW-DRG-7005 v.P03)

Consultation

1. Peter Hillier (Technical Manager, Track Design, URS)
2. Steve Turner (Principal Engineer, Civils Design, URS)
3. Gary Abbott (Bristol LOM, Network Rail)
4. Toby Hetherington (Senior Network Analysts, Network Rail)
5. Anthony Palmer (Signaller, Network Rail)

1 Introduction

The purpose of this document is to support the sketches that have been produced to detail the signalling changes required to support the provision of half-hourly train services to Weston Milton and Yate and hourly services on the re-opened Henbury line (capacity for two new stations) with additional stations on Filton Bank.

The signalling options to be considered are:

1. A bi-directional circular route comprising of Narroways Hill Junction, Avonmouth, Hallen Marsh Junction, Filton West Junction No.2, Filton Abbey Wood and an assessment of the impact on the Seven Beach Line – referred to in this report as the Circular Route Option;
2. A spur line to Henbury, utilising the existing freight lines from the Filton West Junction direction, comprising of a turn-back facility at a to be determined Henbury Station – referred to in this report as the Spur Line Option;
3. Provide design to allow trains to turn-back at Yate (4 car length provision for 5 car lengths); consideration to be given to the detraining of passengers on Platform 1, passing services and the provision of facilities for passengers travelling in the Down direction - referred to in this report as the Yate Option.

In addition there are sub-options for the location of Henbury Station.

For options 1 & 2 SDG have identified and addressed any infrastructure work associated with upgrading the existing freight line to passenger status.

As part of the development SDG have assessed the road closure time issues at St. Andrews Road MCB. All other level crossings within the project area have been assessed for compliance to current standards.

Layout options for Hallen Marsh Junction have also been proposed.

Both TRU video footage and online mapping tools have been used to carry out a desktop survey and signal sighting exercise.

2 Design Parameters

2.1 Control System

St Andrews SB

- St Andrews SB originally dates from 1910 and has both an OCS panel and a NX panel.
- The 1988 Kearns-Barker OCS panel controls the line from Avonmouth to Severn Beach via RRI. This is known as the passenger panel.
- The 1993 Tew NX panel controls the terminal and sidings as well as the Branch Line via SSI. This is known as the freight panel.
- The single line from St Andrews Road to Severn Beach is dual operated by both panels.
- The TD is a VDU mounted on the NX panel.
- St Andrews SB is not scheduled to be transferred onto the Didcot ROC until 2025.

TVSC

- TVSC will be the predominant control centre for the project area. This is due to be commissioned in 2015/6.

2.2 Linespeeds

There is no requirement to increase linespeeds.

Where possible new crossover speeds should be designed to avoid the need for approach controls.

2.3 Signal Spacing

Signal spacing is to conform to Lineside Signal Spacing & Speed Signage GK/RT0075 Appendix A1 where both passenger and freight trains operate.

Where differential linespeeds exist freight trains shall conform to GK/RT0075 Appendix A1 and passenger trains shall conform to GK/RT0075 Appendix B1.

When providing new signals at least 110% of the minimum braking distance has been provided.

2.4 Track

For the purposes of specifying a point machine type it has been confirmed that all new track will be shallow depth CEN56 with concrete bearers.

2.5 Rolling Stock

The following passenger trains will operate over the route: 2 car class 15X (75mph), 158 or 16X (90mph).

There is an aspiration to operate 4 and 5 car formations in future.

2.6 Train Standage

Standage for 775m freight trains has been considered.

The following freight train lengths have been advised by the local signaller:

Destination	Sets	Length	FOC
Avonmouth-Aberthaw	21HTA+Loco	420m	DB Schenker
Avonmouth-Ratcliffe	23HTA+Loco	440m	DB Schenker
Portbury-Aberthaw	21HTA+Loco	420m	DB Schenker
Portbury-Ratcliffe	21HTA+Loco	420m	DB Schenker
TBC	19HAA+Loco	400m	Freightliner
TBC	19HAA+Loco	400m	Colas

2.7 Freight Train Movements

The following are the freight train movements at Bristol Bulk Handling Terminal as advised by the local signaller.

Trains arriving will be held at:

- SA28 if unknown where the shunter wants the train in the yard. This allows a route to the Engine Release line if required.
- SA28 if the train is going into the LPG – West Wharf – stone – cement - Dock sidings and the Up Departure line needs to be kept clear for a train to leave the yard or Docks.
- SA30 If the train is to go into the LPG – West Wharf – stone – cement - Dock sidings. This signal will not clear into the docks unless the shunter operates the acceptance switch near to SA45.
- SA42 or SA40 for trains known to be terminating in the yard but no line yet advised by the shunter.

Trains departing will be held at:

- SA30 for trains leaving the West Wharf / Docks
- SA49 (Engine Release line)
- SA51 No.1 line
- SA53 No.2 line
- SA601 No.3 line
- SA603 No.4 line

2.8 Assumptions

The existing headways have been maintained.

25m stand-back is to be provided at all new signals.

25m stand-back is included in the 155m length of Henbury Station for the Spur option.

All stations will be unmanned and will not require train dispatch equipment.

Passenger permissive working is not required at any new station.

This project will be commissioned after the following projects:

- Bristol Area Signalling Renewal & Enhancements (BASRE) – 2015/6.
- Filton Bank 4-tracking.
- Bristol East Junction Enhancement.
- Bristol Temple Meads Platform 1 Extension.
- Bristol Parkway Platform 1.
- Sita Siding.

3 Circular Route Option

See signalling sketches SDG/SSK/139797/GS2/1-3.

This proposal involves providing the signalling for a new circular route via St Andrews.

Option 2.2 is the preferred option for Hallen Marsh Junction.

The following new stations are required:

- Ashley Down
- Constable Road
- North Filton
- Henbury

3.1 Design Considerations

The majority of the works for bringing the Branch line up to passenger status will have been carried out by the Bristol Area Signalling Renewal project.

3.1.1 Henbury Option 1B

No signalling alterations are required at this station.

3.1.2 Henbury Option 2B

No signalling alterations are required at this station.

3.1.3 North Filton

General

The position of North Filton Station should be reviewed to see whether it can be positioned on approach to BL1834 signal in order to avoid moving it.

BL1834 Signal

This signal needs to move as North Filton station falls where the existing signal stands.

It would be preferable for the station to be on the approach to the existing BL1834 signal.

BL1834 signal should be 25m off the end of the platform but its sighting is constrained by BR11309.

Its new position will require a reduced overlap to avoid locking the junction.

It was felt that BL1834 signal should now be a platform starter as it is also a junction signal so that a driver does not forget what route has been set and so that the junction is not locked whilst a train is stood at the station for an extended time.

BL1834's TPWS fitment will require reviewing for protecting against conflicts at Filton West Junction. As this signal is moving closer to the junction it may be that full protection is not possible and the

overlap may need to extend through the junction. The operational restrictions this imposes could be alleviated by providing a restricted overlap and warner route in rear.

As a reduced overlap is proposed for this arrangement this will be subject to risk assessment in GRIP stage 4.

Alternative Options

Alternative options that would require further investigation are:

- Relocate the station on approach to the existing BL1834. This would remove the need to relocate the signal.

SDG Recommendations

Additional work identified by SDG that is worth further investigation:

- Consider converting BL6602 to a main signal so that platform 2 can be used as a turnback platform in case of emergency. It may also need relocating closer to the station to improve signal sighting.
- Consider plain-lining 8737A points as trap points will no longer be required if all lines are passenger status.
- Consider lifting the current 50mph PSR to 60mph on the up on approach to Filton West Junction.

3.1.4 Ashley Down

No signalling alterations are required at this station.

3.1.5 Constable Road

General

The position of Constable Road Station should be reviewed to see whether it can be positioned on approach to BL1590 signal in order to avoid moving it.

BL1587 Signal

This signal would need to move to keep it parallel with BL1589.

BL1589 Signal

It is recommended that this signal is relocated as a platform starter.

The signal would be on approach to the station which in itself isn't an issue but it's overlap would go into the platform. This means that when the station is occupied double blocking would occur and the station re-occupancy time could be overly long.

This signal would also have a high overrun risk score having the station so close.

BL1590 Signal

This signal needs to move as Constable Road Station falls where the signal stands.

Ideally it would be preferable for the station to be on the approach to the existing BL1590 signal.

BL1592 Signal

This signal will need to move to keep it parallel with BL1590 signal.

Also this signal may be in the way of the construction of the new platform.

TPWS fitment will require reviewing to protect against conflicts at Horfield Junction.

Alternative Options

Alternative options that would require further investigation are:

- Relocate the station on approach to the existing BL1590 & BL1592 signals. This would remove the need to relocate any signals.
- Relocate the station on approach to the existing BL1587 & BL1589 signals. This would remove the need to relocate any signals.

- For proposed station position retain BL1587 and BL1589 in their existing positions and accept platform within overlap.

3.1.6 Hallen Marsh Junction

Option 2.2 is the chosen option for this area (see Appendix A).

General

The double crossover proposal for Hallen Marsh would require extensive signalling alterations.

It is recommended that all new crossovers are at least 30mph in speed to allow free aspects from protecting junction signals.

As the arrival and departure lines in the terminal are bi-directional and controlled from St Andrews Jcn SB it will assist in managing the conflict between the passenger service and freight.

The new crossover between the single line and up branch will be across an RRI/SSI interlocking boundary therefore cross-boundary controls will be required.

Due the increased passenger services through this junction a full operational review is required to ensure that the current control arrangement is fit for purposes.

The Pasminco Smelting Siding and the associated Down Loop are currently out of use and subject to network change.

The Avonmouth BP LPG Terminal Siding is in constant use.

The single line is controlled by SA7 signal which can only clear when SA47 has cleared.

Alterations would be required to the one train working to Severn Beach to allow improved flexibility through Hallen Marsh and Holesmouth Junctions.

SA47 and SA38 can currently be worked by either panel.

SA32 Signal

Provide position 4 and 5 route indications.

SA37 Signal

This signal could be provided with a position 4 route indicator if operations require the flexibility.

SA38 Signal

Relocate signal and its distant. Treadle also requires moving.

SA47 Signal

Signal requires converting from 2 to 3 aspect.

PLJI can be removed.

SAZZ Signal

This signal is required to control moves up to and protect the Severn Beach single line. This will allow restrictive controls to be removed from SA47 signal which will allow routes to be set from SA45 whilst a train occupies the Severn Beach line.

The single line working controls should be reviewed. It is proposed that it is worked to OTW (tokenless) regulations using sequential track circuits to allow Holesmouth Jcn to be used once a train is proven to have passed SA38 signal – see GK/RT0055. The box instruction will require amending.

This signal may need to be controlled by both panels as per SA37 and SA45.

Provide position 4 route indicator.

SA137A/B Points

Points to be relocated.

Provide in-bearer clamp locks.

Bristol Bulk Handling Terminal

Moves within the terminal will need to be trapped against the branch line which will be passenger status.

There are various options proposed for this junction but the preferred option is to provide a double junction on the Avonmouth side of Holesmouth Junction.

Standage will be reduced on the arrival and departure lines.

Chittening Estate Siding

Moves within the siding will need to be trapped against the branch line which will be passenger status.

SA626 requires miniature route indicator.

SA626 may need to be converted to a main signal if it's a start away signal.

Alternative Options

Alternative options that require further investigation are detailed on the following sketches:

- SDG/SSK/139797/GS2/3A-L

3.2 Signal Sighting

Initial assessment using the TRU video footage and the Signal Tool indicates that compliant sighting can be achieved for all signal moves at the current linespeeds.

BL1834 signal needs to be on approach side of bridge 11309 as the PLJI can't be properly sighted through the bridge portal.

All sighting is to be subject by an initial signal sighting review by a signal sighting chairman at GRIP stage 3.

MRT assumed to be 8s (additional time may be proposed by SSC).

Signal	Speed (mph)	MRD (m)	Estimated ARD (m)
BL1834	60	215	550
SAZZ	30	107	400
SA38	50	179	TBC*
SA38 Distant	50	179	TBC*
BL1587	85	304	TBC*
BL1589	75	268	TBC*
BL1590	75	268	TBC*
BL1592	75	268	TBC*

Screenshots taken from the Signal Tool can be found in Appendix B.

** No available video footage*

3.3 Overrun Risk

It is recommended that a suitable SOD is allowed for when considering the relative positions of signal, platform and turnout.

Overrun risk is a particular concern for the various proposals at Hallen Marsh Junction. The increase in passenger traffic and the increased complexity of the junction will increase the overall risk of SPADs.

Although some points will be locked by overlaps and trapping protection will be provided this will have an impact operationally as more trains will need to be timed to stand to release routes.

Where possible restrictive approach controls should be avoided by providing higher speed turnouts. The provision of approach control from red increases the risk of SPADs.

All signals affected by the increase in service would need to be risk assessed as part of the SORAT process as it would be considered to be a major timetable change.

Trapping risk assessments will be required. Where possible traps should be positioned so that TPWS protects against a derailment.

Reduced overlap risk assessments will be required.

3.4 Level Crossings

See Level Crossing Assessment SDG/LXA/139797/GS2.

Level crossings have been assessed for compliance in a separate document and no additional work has been proposed.

The following crossings have been identified (mileage & ELR):

- BAC UWC (113M 30ch AFR) *will be closed by the time of the commissioning*
- St Andrews Junction MCB (16M 0ch, AMB / 9M 32ch, CNX)
- Avonmouth Station MCB-CCTV (9M 8ch, CNX)
- Avonmouth Dock Junction MCB-CCTV (8M 29ch, CNX)
- Sea Mills FP & UWC (6M 4ch, CNX)
- Cotham Park UWC (5M 20ch, FWC) *currently padlocked out of use*

Due to the close proximity of each crossing to each other and their position relative to Avonmouth Station it can be seen why these crossings are fully controlled by the signaller.

The road traffic light sequence is initiated by the signaller on receiving an audible alarm or by observation.

Unless some or all of the crossings can be closed it is doubtful whether any improvement in their operation can be made apart from conversion to MCB-OD.

Strike-in controls could be provided on these crossings which would require substantial wiring alterations but due to the crossing being close to each and there being various stopping and non-stopping scenarios it is considered that the barrier lower initiation is best controlled by the signaller.

The nature of the project will mean that there will be an increase in passenger traffic on both directions through all crossings and therefore the frequency of road closures will increase.

It is understood that there are extended road closure time issue at St Andrews Road MCB due to St Andrews Station on the down direction approach being a request stop. There are no auto-lower controls on this crossing and the signaller initiates the barrier lower sequence on the assumption that a train is not going to stop at the station. When a train subsequently does stop at the station the road is closed for a prolonged period of time until a train has departed and cleared the crossing. There are no signalling controls that can address this issue so it is recommended that either all trains or certain services stop at St Andrews Station or the station is closed altogether.

It is proposed that full and sufficient risk assessments are carried out on all level crossings within the project area during GRIP stage 3 to ensure that they are fit for purpose.

3.5 Technology

The technology by the time of the commissioning will be an SSI-based interlocking with VDU workstation located at TVSC.

St Andrews Junction SB has both RRI & SSI interlockings controlled by OCS and NX panels respectively.

The proposed alterations affect all of these.

It is proposed that all new signals are LED type.

New signals could be foldable type to aid maintenance.

An assessment of space for additional equipment will be required in the relay room at St Andrews Junction.

An assessment of the existing multi-core cables and cable route will also be required to determine if spare capacity exists.

An analysis of the existing SSI capacity at St Andrews Junction is summarised below:

Interlocking	Existing TFM	New TFM (estimate)	Total Requirement
BRISTBHT	39	1	40
HALLENJN	32*	6	38

There is more than sufficient capacity in both interlockings for the additional equipment required.

The SSI dates from 1993 so spare equipment for this version of SSI may be an issue. Identifying a source for spare TFMs and DLMs at earliest opportunity will be important. Some spares would be freed up by the recovery of the Down Loop.

** Additional capacity will be created by the recovery of the Down Loop and Pasminco Sidings.*

3.6 Alterations Required

Signalling alterations listed in this section have been broken down per site and control point.

TVSC

- VDU alterations
- SSI data alterations (possible)

St Andrews Junction SB

- NX panel alterations
- OCS panel alterations
- SSI data alterations
- RRI wiring alterations
- TD alterations

Hallen Marsh Junction Option 2.2

- 3 new crossovers
- 3 new trap points
- 9 new in-bearer clamp lock point machines
- New location cases
- New SSI equipment
- New track circuit equipment
- Track circuit bonding alterations
- 4 TC interrupters
- 1 new signal (SAZZ)
- SAZZ signal requires TPWS fitment
- SAZZ signal requires AWS fitment
- 2 new route indications (PLJI)
- Convert SA47 from 2 to 3 aspect signal
- New speed signage
- PZT will be required
- Move SA38 signal + AWS & TPWS
- Move SA38 fixed distant
- Move treadle
- Possibly provide MI on SA626 signal

Henbury Station Option 1B

- No signalling alterations are required at this station

Henbury Station Option 2B

- No signalling alterations are required at this station

North Filton Station

- BL1834 signal to be relocated
- BL1834 AWS move
- BL1834 TPWS move
- New location cases
- Axle counter alterations

Constable Road Station

- BL1590 signal relocated
- BL1590 AWS relocated
- BL1592 signal relocated
- BL1592 AWS relocated
- BL1592 TPWS relocated
- BL1587 signal relocated
- BL1589 AWS relocated
- BL1589 signal relocated
- BL1587 AWS relocated
- 40mph PSWI relocated
- Axle counter moves
- New location cases

Ashley Down Station

- No signalling alterations are required at this station

3.7 Other Considerations

There is a section of 50mph in the up direction only on the branch line between 113 miles & 113 miles and 6 chains. It should be investigated as to whether this can be increased to 60mph.

As all lines will be passenger status the trap points on Filton Chord could be recovered and plain-lined as they will be an unnecessary maintenance liability. BL2049 signal's TPWS will require assessing to ensure that the fitment provides adequate protection.

Telecoms input will be required for the relocation of the SPT.

It is recommended that the additional power requirements are allowed for by the BASRE project.

Consider abolishing St Andrews Junction SB and transferring the signalling onto TVSC ahead of the proposed 2025 date for transfer onto Didcot ROC.

A problem may be the remote control of 3 MCBs in close proximity to each other and stations.

Train dispatch equipment will be subject to review at all stations.

This will be dependant on whether station staff are required or whether the train guard will be responsible.

The control of passenger trains will require them to be passed between signallers within St Andrews as control will be split between the NX panel and the OCS panel.

It is recommended that the Up and Down Branch is renamed to reflect its passenger status.

This could be done as part of the BASRE project.

The introduction of new bi-directional working may require staff protection equipment.

The method of axle counter rest/restore will be consistent with TVSC.

Site access should be reviewed at GRIP stage 4 for the chosen option.

Reduced overlap risk assessments will be required at GRIP stage 4.

The frequency of road closures will increase at each crossing.

An ergonomic review will be required to assess the additional workload on the St Andrews SB signallers due to the additional trains over the MCBs and the handover of the trains between NX and OCS panels.

An assessment will be required to determine whether spare capacity is available in the SSI and whether spare TFM inputs/outputs are available.

If timescales align provision could be made for these works by the BASRE project.

Freight operations in the area should be subject to a review as there is potential for the current operations to block passenger movements.

4 Spur Line Option

See signalling sketches SDG/SSK/139797/GS2/1 & 4.

This proposal involves providing the signalling for a turn-back station at Henbury.

The following new stations are required:

- Ashley Down
- Constable Road
- North Filton
- Henbury

4.1 Design Considerations

The majority of the works for bringing the Branch line up to passenger status will have been carried out by the BASRE project.

See section 3.1 for Ashley Down, Constable Road and North Filton stations.

4.1.1 Henbury Option 1A

General

This option positions a bay platform adjacent to the main line between the 115 & 115¼ mileposts.

An OSS will be required to protect the buffer stops.

The buffer stop will be subject to risk assessment at GRIP stage 4.

Signal sighting will determine whether a buffer stop light will be required.

The station is positioned at the boundary between St Andrews Junction SB and what will be TVSC at the time of commissioning. It is recommended that moves into and out of the station is fully controlled by one signaller therefore the boundary between TVSC and St Andrews Jcn will need to move. This will require alterations to St Andrew's Jcn NX panel, it's SSI and its lineside equipment at the fringe. Alterations will also be required on TVSC VDU and its SSI-based data.

Traps points will not be required as long as the bay itself is on a level gradient.

BLXXXX Signal

This signal is the platform starting signal out of the bay platform.

This signal is positioned to allow for a future platform extension plus 25m standback.

The signal will be fitted with a TSS.

An overlap and AWS will not be required.

Signal sighting can not yet be evaluated but it is not considered to be an issue however the provision of platform furniture must obscure the visibility of the signal for train staff particularly if the guard is at the rear of the train.

It is recommended that VR model of this station is created during GRIP stage 3 so that signal sighting can be completed during GRIP stage 4.

BLYYYY Signal

This signal will replace the existing SA24 and will be positioned overlap clear of BB crossover to avoid providing a swinging overlap.

This signal is to be provided with a standard indicator for the route into the bay platform.

With an approach speed of 60mph and a turnout speed of 25mph the route into the bay platform will be approach controlled from red. As there is only one route indication the signal can be released as soon as it passes the signal in rear. This will be subject to confirmation by signal sighting.

There is no requirement to provide permissive working in the platform so a PLS has not been provided.

BL1835 Signal

This signal will require repositioning to provide adequate signal spacing to BLYYYY.

As spacing between BLYYYY and the existing BL1835 signal would be under-braked on a steep falling gradient an alternative position closer to BB points was considered which would provide a swinging overlap through BB points. It was found that the signal is still under-braked in this position so BL1835 will need to move for either position.

BL1838 Signal

BL1838 is an existing automatic signal that will need to move to provide protection for the new S&C and will require converting to a controlled signal.

This signal will be fitted with TPWS.

Its position on the sketch is shown so that it is overlap clear of AA points to provide operational flexibility. Its final position will be subject to signal sighting and evaluation of the TPWS design.

There is an alternative sub-option to provide an island platform. If this is to be provided then BL1838 would be better positioned as platform starter for this platform. The disadvantage would be that its overlap would lock AA points. The position of BL1838 will need further discussion with NR Operations to understand it best position.

BL1842 Signal

As long as BL1838 is overlap clear of AA points BL1842 will not require any work; however, if BL1838's overlap does extend to lock AA points then BL1842 will require converting to a controlled signal.

AA Points

Point type is likely to be an in-bearer clamp lock.

A PZT will be required.

BB Points

Point type is likely to be an in-bearer clamp lock.

A PZT will be required.

These points will require auto-normalisation controls.

Alternative Options

Alternative options that would require further investigation are:

- Provide main line platforms and turnback via the out of use Down Loop at Hallen Marsh.
- Provide main line platforms and extend the bi-directional working to North Filton.

4.1.2 Henbury Option 2A

General

This option positions a bay platform adjacent to the main line between the 115¼ & 115½ mileposts.

An OSS will be required to protect the buffer stops.

The buffer stop will be subject to risk assessment at GRIP stage 4.

Signal sighting will determine whether a buffer stop light will be required.

The station is positioned at the boundary between St Andrews Junction SB and what will be TVSC at the time of commissioning. It is recommended that moves into and out of the station is fully controlled by one signaller therefore the boundary between TVSC and St Andrews Jcn will need to move. This will require alterations to St Andrew's Jcn NX panel, its SSI and lineside equipment at the fringe. Alterations will also be required on TVSC VDU and its SSI-based data.

A concern is the distance from BB points to AA points as this will introduce 200m of wrong road working. This might be operationally restrictive and will increase the risk of a head-on collision although this will be mitigated by the provision of TPWS. Maintenance will need to be consulted as to whether staff protection equipment is required.

Traps points will not be required as long as the bay itself is on a level gradient.

BLXXXX Signal

This signal is the platform starting signal out of the bay platform.

This signal is positioned to allow for a future platform extension plus 25m standback.

The signal will be fitted with a TSS.

An overlap and AWS will not be required.

Signal sighting can not yet be evaluated but it is not considered to be an issue however the provision of platform furniture must obscure the visibility of the signal for train staff particularly if the guard is at the rear of the train.

It is recommended that VR model of this station is created during GRIP stage 3 so that signal sighting can be completed during GRIP stage 4.

BLYYYY Signal

This signal will replace the existing SA24 and will be positioned overlap clear of BB crossover to avoid providing a swinging overlap.

This signal is to be provided with a standard indicator for the route into the bay platform.

As spacing to BL1835 signal in rear is only marginally compliant on a steep falling gradient an alternative option is to position the signal so that a swinging overlap extends through BB points. This will provide approximately an additional 180m spacing but will require more complex data and BL1835 signal will need to be converted from an automatic signal to a controlled signal. Time of operation locking may also be required on BB points.

With an approach speed of 60mph and a turnout speed of 25mph the route into the bay platform will be approach controlled from red. As there is only one route indication the signal can be released as soon as it passes the signal in rear. This will be subject to confirmation by signal sighting.

Due to the distance of BB crossover from the station the speed of the crossover should be validated against the deceleration profile of a train stopping at the station so that a train isn't unduly slowed down or encouraged to accelerate beyond the crossover.

There is no requirement to provide permissive working in the platform so a PLS has not been provided.

BL1838 Signal

BL1838 is an existing automatic signal that will need to move to provide protection for the new S&C and will require converting to a controlled signal.

This signal will be fitted with TPWS.

Its position on the sketch is shown so that it is overlap clear of AA points to provide operational flexibility. Its final position will be subject to signal sighting and evaluation of the TPWS design.

There is an alternative sub-option to provide an island platform. If this is to be provided then BL1838 would be better positioned as platform starter for this platform. The disadvantage would be that its overlap would lock AA points. The position of BL1838 will need further discussion with NR Operations to understand it best position.

BL1842 Signal

As long as BL1838 is overlap clear of AA points BL1842 will not require any work; however, if BL1838's overlap does extend to lock AA points then BL1842 will require converting to a controlled signal.

AA Points

Point type is likely to be an in-bearer clamp lock.

A PZT will be required.

BB Points

Point type is likely to be an in-bearer clamp lock.

A PZT will be required.

These points will require auto-normalisation controls.

Alternative Options

Alternative options that would require further investigation are:

- Provide main line platforms and turnback via the out of use Down Loop at Hallen Marsh.
- Provide main line platforms and extend the bi-directional working to North Filton.

4.2 Signal Sighting

An initial assessment of signal sighting has been carried out using the TRU video footage and the Signal Tool.

BLXXXX signal is a turn-back signal so no signal sighting issues are envisaged.

All sighting is to be subject by an initial signal sighting review by a signal sighting chairman at GRIP stage 3.

MRT assumed to be 8s (additional time may be proposed by SSC).

	Signal	Speed (mph)	MRD (m)	Estimated ARD (m)
Option 1A	BLYYYY	60	215	320
	BL1835	60	215	30*
	BL1838	60	215	270
Option 2A	BLYYYY	60	215	270
	BL1838	60	215	245

Screenshots taken from the Signal Tool can be found in Appendix B.

** Vegetation clearance would be required to achieve MRD.*

4.3 Overrun Risk

With the introduction of a passenger service to the Branch line the overrun risk in general will be worsened.

New conflicts are created by the introduction of the layout changes required for Henbury station.

The risk of SPADs will be increased by an enhanced train service and the increased likelihood of red aspects.

A TSS is to be provided on BLXXXX signal to mitigate the risk of a SASSPAD.

It is recommended that a suitable SOD is allowed for when considering the relative positions of signal, platform and turnout.

It is a concern that BLYYYY signal is tightly spaced to BL1835 signal on a steep falling gradient which may create problems for a train driver judging his stopping position with BLYYYY at red.

BLYYYY will be approach controlled from red and therefore there is a risk of an anticipation SPAD by drivers expecting the signal to display a proceed aspect. This will be mitigated by achieving the earliest possible release of the signal but will be dependant on signal sighting.

BL1590 & BL1592 signals are to be relocated but there will be no significant change in overrun risk. BL1590 signal has not conflicts.

BL1592 signal's SOD is reduced and its TPWS fitment will be reviewed to provide suitable overrun protection.

All signals affected by the proposed timetable change will be subject to overrun risk assessments in GRIP stages 3 and 4 as it would be considered to be a major timetable change. A draft timetable will need to be developed as a basis for these assessments.

The length of wrong direction move from BLYYYY signal into the bay platform at Henbury is a concern as it increases the likelihood of a head-on conflict if there was a SPAD.

4.4 Level Crossings

See Level Crossing Assessment SDG/LXA/139797/GS2.

Level crossings have been assessed for compliance in a separate document and no additional work has been proposed.

BAC UWC will be closed by the time of the commissioning.

4.5 Technology

The existing technology by the time of the commissioning will be an SSI-based interlocking with VDU workstation.

St Andrews Junction SB is an RRI & SSI interlockings controlled by OCS and NX panel.

The affected fringe is with the SSI and NX panel.

4.6 Alterations Required

See section 4.6 for Ashley Down, Constable Road and North Filton stations.

Signalling alterations listed in this section have been broken down per site and control point.

TVSC

- VDU alterations
- SSI data alterations

St Andrews Junction SB

- NX panel alterations
- SSI data alterations

Henbury Station Option 1A

- New BLXXX signal required
- BLXXXX signal requires TPWS fitment
- BL1838 signal relocated
- BL1838 AWS move
- BL1838 signal requires TPWS fitment
- BL1838 SPT move
- SA24 signal to be relocated, converted from auto to controlled, renamed and transferred onto TVSC
- BLYYYY (SA24) AWS move
- BLYYYY (SA24) signal requires TPWS fitment
- BLYYYY (SA24) signal requires a SI
- BL1835 signal repositioned
- BL1835 AWS move
- BL1835 SPT move

- Vegetation clearance on approach to BL1835
- 3 new in-bearer clamp locks required at Henbury
- 7 additional axle counter sections
- Alterations to 2 existing axle counter sections
- Recovery of track circuits and IBJs
- New location cases & internal equipment
- Power supply, LDT & cable route modifications
- Buffer stop OSS required
- Buffer stop light provided

Henbury Station Option 2A

- New BLXXX signal required
- BLXXXX signal requires TPWS fitment
- BL1838 signal relocated
- BL1838 AWS move
- BL1838 signal requires TPWS fitment
- BL1838 SPT move
- SA24 signal to be relocated, converted from auto to controlled, renamed as BLYYYY and transferred onto TVSC
- BLYYYY (SA24) AWS move
- BLYYYY (SA24) signal requires TPWS fitment
- BLYYYY (SA24) signal requires a SI
- 3 new in-bearer clamp locks required at Henbury
- 7 additional axle counter sections
- Alterations to 2 existing axle counter sections
- Recovery of track circuits and IBJs
- New location cases & internal equipment
- Power supply, LDT & cable route modifications
- Buffer stop OSS required
- Buffer stop light provided

4.7 Other Considerations

Could running line signals be moved in advance by the BASRE project? Would it provide any benefit?

BL6602 PLGS at North Filton could be converted to a main signal and used as a turn-back signal.

Consider plain-lining BL8737A trap points as they will not be required by signalling standards if the line is upgraded to passenger status.

A Civil Engineering review will be required for the proposed new signal positions *(it is recommended that a Civil Engineer attends the signal sighting)*.

Telecoms input will be required for the relocation of the SPT.

E&P input will be required for any modifications to the 650v power supply.

Ashley Down and Constable Road Stations will be on a 1 in 75 gradient which will limit the capability to stable trains for extended periods of time.

This will also make it difficult for trains to judge their braking when stopping at the station.

It is assumed that Henbury bay platform will be constructed on a level gradient regardless of the main line gradient.

North Filton Station will be on a 1 in 210 gradient which will limit the capability to stable trains for extended periods of time subject to risk assessment.

Train dispatch equipment will be subject to review at all stations.

This will be dependant on whether station staff are required or whether the train guard will be responsible.

Site access should be reviewed at GRIP stage 4 for the chosen option.

An assessment will be required to determine whether spare capacity is available in the SSI and whether spare TFM inputs/outputs are available.

If timescales align provision could be made for these works by the BASRE project.

5 Yate Turnback Option

See signalling sketch SDG/SSK/139797/GS2/5.

This proposal involves providing the signalling for a turnback facility at Yate Station to allow the extension of the Bristol Parkway-Weston-super-Mare service.

5.1 Design Considerations

BLSSSS Signal

This signal is the departure signal for the new turnback facility.

Trap points are required to protect the adjacent main line against a SPAD.

A track circuit interrupter will be required to be proved normal in the adjacent route.

This signal will require fitting with a TSS and should be positioned at SOD from the derailment point.

BLTTTT Signal

This signal is a fixed red plus a PLS.

This signal is required to replace the existing LOS in order to provide a signalled route into the turnback facility.

This signal will require an AWS.

This signal could re-use existing BL6562 TSS.

BL2034 Signal

A position 4 PLJI is to be provided for the new route up to BLTTTT signal.

A flashing yellow sequence could be provided on approach to this signal.

Appropriate speed signage to be provided.

CC Points

The point machine will be in-bearer clamp lock type.

Auto-normalisation controls would be required.

Alternative Options

Alternative options to be considered:

- Additional new crossover to provide route from up platform to turnback platform.
- Extend bi-directional working to Yate up platform and use Tytherington single line to stable empty stock. Trains would depart on the up.
- Trains to arrive on the up and use Up/Down Westerleigh to turnaround and then depart on the down. Would require extending bi-directional working on the up.

5.2 Signal Sighting

Initial assessment using the TRU video footage and the Signal Tool indicates that compliant sighting can be achieved for all signals moves at the current linespeeds.

All sighting is to be subject by an initial signal sighting review by a signal sighting chairman at GRIP stage 3.

BLSSSS signal is the siding exit signal so no signal sighting issues are envisaged.

MRT assumed to be 8s (additional time may be proposed by SSC).

Signal	Speed (mph)	MRD (m)	Estimated ARD (m)
BL2034	65	232*	232 (215 for PLJI*)
BLTTTT	40	143	TBC**

Screenshots taken from the Signal Tool can be found in Appendix B.

** Vegetation clearance would be required to achieve MRD.*

*** No available video footage.*

5.3 Overrun Risk

The overrun risk on BL2025 will be increased due to the addition of the siding.

A TSS is to be provided on BLSSSS signal to mitigate the risk of derailing on the trap points.

If MAY-FA is provided for the new route on BL2034 then the overrun risk would not be worsened. Provision of MAR may increase the risk of an anticipation SPAD.

All signals affected by the increase in service would need to be risk assessed as part of the SORAT process as it would be considered to be a major timetable change.

5.4 Level Crossings

No level crossings are affected by this option.

5.5 Technology

The existing technology by the time of the commissioning will be an SSI-based interlocking with VDU workstation.

5.6 Alterations Required

Signalling alterations listed in this section have been broken down per site and control point.

TVSC

- VDU alterations
- SSI data alterations

Yate Turnback Facility

- 2 new in-bearer clamp lock point machine
- 1 new track circuit interrupter
- 1 new LED signal
- 1 new PLJI on BL2034
- Vegetation clearance on approach to BL2034
- 1 new fixed red signal + PLS
- 1 new TSS
- New axle counter sections
- Buffer stop & lighting

- 1 new AWS + suppressor (may not be required if AWS shared)
- New sped signage
- PSWI + AWS + suppressor to be provided if flashing yellows required (may not be required if AWS shared)

Alternative options to be considered:

- Additional new crossover to provide route from up platform to turnback platform.
- Extend bi-directional working to Yate up platform and use Tytherington single line to stable empty stock. Trains would depart on the up.
- Trains to arrive on the up and use Up/Down Westerleigh to turnaround and then depart on the down. Would require extending bi-di working on the up.

5.7 Other Considerations

A trapping risk assessment will be required during GRIP stage 4.

An assessment will be required to determine whether spare capacity is available in the SSI and whether spare TFM inputs/outputs are available.

If timescales align provision could be made for these works by the BASRE project.

6 Conclusion

As can be seen from this report all options have their issues that would need further investigation to be resolved.

The Spur Option seems to be the simplest and cheapest from a signalling point of view. The only complication is the provision of the Henbury bay platform on the current boundary between St Andrews Junction SB and TVSC.

The Circular Route Option is constrained by the work that will be required at Hallen Marsh Junction as a result of providing more flexibility in the layout and upgrading the branch line to passenger status. This will have a significant cost and will impact on the current operations at Portbury Terminal.

There is no signalling solution that can remove the issue of extended road closure times at St Andrews MCB. It is recommended that either all trains or certain services stop at St Andrews Station or the station is closed altogether.

If the circular route option is selected as the single option it is recommended that the signalling controls for the Severn Beach single line are reviewed to identify what modifications are required to allow a train to traverse Holesmouth Junction with a train occupying the single line. However, it is anticipated that by providing a signal parallel to SA37 tokenless one train working regulations can be conformed to by using sequential track circuits.

Appendix A: Hallen Marsh Option 2.2 Sketch

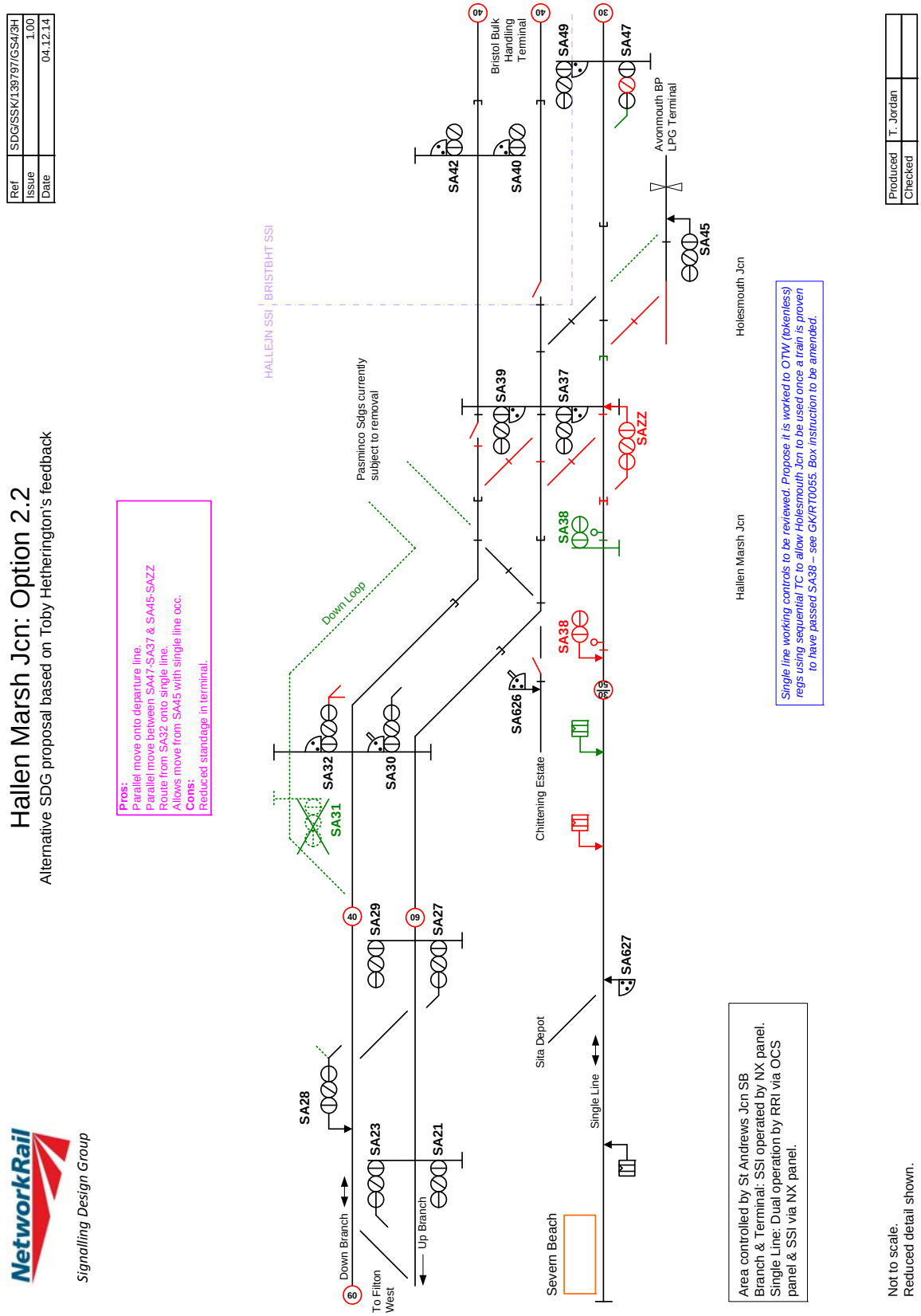

Appendix B: Signal Sighting

BL1834

BL1835 (Option 1A)

BL1838 (Option 1A)

BL1838 (Option 2A)

BLYYYY (Option 1A)

BLYYYY (Option 2A)

BL2034

Appendix C: SEU Count

MetroWest Phase 2

Signalling Equivalent Unit (SEU) Count

Control/Project Area:	Spur Line Option
Date of Count:	11/12/2014
Produced by:	Carlton Chance
Checked by:	

Source Drawing	Interlocking	Main Signal	Distantsignal	Sub Signal	PUGS/UGS	Points/ends	Level Xings	Ground Frames	Plungers	PLOO	Lifting Bridges	Total SEU	Notes
SDG BSK/139797/GS2/1		4	0	0	0	0	0	0	0	0	0	4	
SDG BSK/139797/GS2/4		5	0	0	0	3	0	0	0	0	0	8	
												0	
												0	
												0	
												0	
												0	
												0	
												0	
												0	
	Totals:	9	0	0	0	3	0	0	0	0	0	12	

Notes:

#1: Includes moving BL1836 Signal

#2:

#3:

#4:

#5:

#6:

#7:

#8:

#9:

#10:

SDG - LNW (Birmingham)

Spur Line Option
MetroWest SEU Count.xls

MetroWest Phase 2
Signalling Equivalent Unit (SEU) Count

NetworkRail

Control/Project Area:	Circular Route Option
Date of Count:	27/11/2014
Produced by:	Carlton Chance
Checked by:	

Source Drawing	Interlocking	Main Signal	Distant/Banner/PRI	Sub Signal	PL/GS/LOS	Point ends	Level Xings	Ground Frames	Plungers	PLOD	Lift/Swing Bridges	Total SEU	Notes
SDG/SSK/139797/GS2/1		4	0	0	0	0	0	0	0	0	0	4	
SDG/SSK/139797/GS2/2		1	0	0	0	0	0	0	0	0	0	1	
SDG/SSK/139797/GS2/3		3	0	0	0	9	0	0	0	0	0	12	
												0	
												0	
												0	
												0	
												0	
												0	
												0	
	Totals:	8	0	0	0	9	0	0	0	0	0	17	

Notes:

#1: Does not include converting BL1855 signal to 4 aspect.
#2: Does not include converting SA47 signal to 3 aspect.
#3:
#4:
#5:
#6:
#7:
#8:
#9:
#10:

MetroWest Phase 2
Signalling Equivalent Unit (SEU) Count

NetworkRail

Control/Project Area:	Yate Turnback Option
Date of Count:	11/12/2014
Produced by:	Carlton Chance
Checked by:	

Source Drawing	Interlocking	Main Signal	Distant/Banner/PRI	Sub Signal	PL/GSL/OS	Point ends	Level Xings	Ground Frames	Plungers	PLOD	Lift/Swing Bridges	Total SEU	Notes
SDG/SSK/139797/GS2/5		2	0	1	0	2	0	0	0	0	0	5	
												0	
												0	
												0	
												0	
												0	
												0	
												0	
												0	
												0	
	Totals:	2	0	1	0	2	0	0	0	0	0	5	

Notes:

#1: Does not include position 1 PLJI on BL2034 Signal.
#2: Does not iinclude FY aspect on BL2040 Signal.
#3:
#4:
#5:
#6:
#7:
#8:
#9:
#10:

Appendix D: Abbreviations

Term	Meaning
ARD	Achievable Reading Distance
AWS	Automatic Warning System
BASRE	Bristol Area Signalling Renewals & Enhancements
BL	*(equipment identifier)*
BP	British Petroleum
CCMS	Corporate Content Management System
CCTV	Closed Circuit Television
Ch	Chain
DLM	Data Link Module
E&P	Electrification & Plant
ELR	Engineer's Line Reference
FOC	Freight Operating Company
FP	Footpath
g	Gravity
GRIP	Guide to Railway Investment Projects
IBJ	Insulated Block Joint
Jcn	Junction
LDT	Lineside Data Transmission
LED	Light Emitting Diode
LOM	Local Operations Manager
LOS	Limit of Shunt
LPG	Liquefied Petroleum Gas
M	Miles
m	metres
MAY-FA	Approach release from yellow with a flashing yellows in rear
MAR	Approach release from red
MCB	Manned Controlled Barriers
MI	Miniature Indicator
mph	Miles per hour
MRD	Minimum Reading Distance
MRT	Minimum Reading Time
N/A	Not Applicable
NR	Network Rail
NX	Entrance-Exit
OCS	One Control Switch
OD	Obstacle Detector
OSS	Overspeed Sensor
OTW	One Train Working
PLGS	Position Light Ground Signal
PLJI	Position Light Junction Indicator

Term	Meaning
PLS	Position Light Signal
PSR	Permanent Speed Restriction
PSWI	Permanent Speed Warning Indicator
PZT	Point Zone Telephone
ROC	Rail Operating Centre
ROL	Restricted Overlap
RRI	Route Relay Interlocking
S&C	Switch & Crossing
SA	St Andrews Junction SB *(equipment identifier)*
SAT	Signal Assessment Tool
SB	Signal Box
SDG	Signalling Design Group
SEU	Signalling Equivalent Unit
SOD	Safe Overrun Distance
SORAT	Signal Overrun Risk Assessment Tool
SPAD	Signal Passed at Danger
SPT	Signal Post Telephone
SSC	Signal Sighting Committee
SSI	Solid State Interlocking
TBC	To Be Confirmed
TC	Track Circuit
TD	Train Describer
TFM	Trackside Functional Module
TPWS	Train Protection & Warning System
TRU	Train Recording Unit
TSS	Trainstop Sensor
TVSC	Thames Valley Signalling Centre
UWC	User Worked Crossing
VDU	Visual Display Unit
VR	Virtual Reality

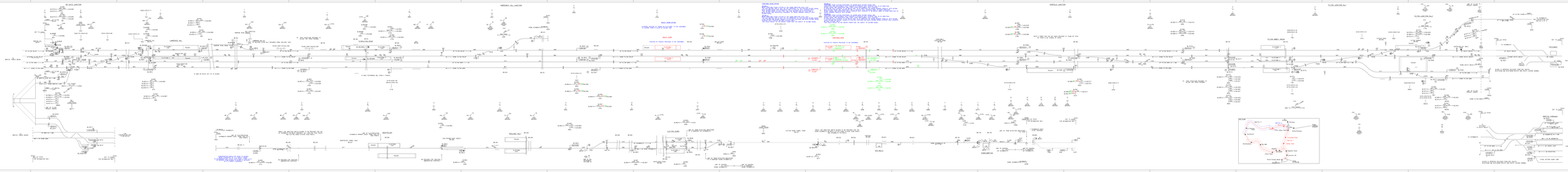
BY-PASS JUNCTION
MERCURY HILL JUNCTION
VERTICAL JUNCTION
TILTON JUNCTION
TILTON JUNCTION (N.)
TILTON JUNCTION (S.)
CRYSTAL HILL
CRYSTAL HILL JUNCTION
CRYSTAL HILL (N.)
CRYSTAL HILL (S.)
CRYSTAL HILL (N.) JUNCTION
CRYSTAL HILL (S.) JUNCTION
CRYSTAL HILL (N.) JUNCTION (S.)
CRYSTAL HILL (S.) JUNCTION (N.)
CRYSTAL HILL (N.) JUNCTION (N.)
CRYSTAL HILL (S.) JUNCTION (S.)
CRYSTAL HILL (N.) JUNCTION (N.) (S.)
CRYSTAL HILL (S.) JUNCTION (S.) (N.)
CRYSTAL HILL (N.) JUNCTION (N.) (N.)
CRYSTAL HILL (S.) JUNCTION (S.) (S.)
CRYSTAL HILL (N.) JUNCTION (N.) (N.) (N.)
CRYSTAL HILL (S.) JUNCTION (S.) (S.) (S.)
CRYSTAL HILL (N.) JUNCTION (N.) (N.) (N.) (N.)
CRYSTAL HILL (S.) JUNCTION (S.) (S.) (S.) (S.)
CRYSTAL HILL (N.) JUNCTION (N.) (N.) (N.) (N.) (N.)
CRYSTAL HILL (S.) JUNCTION (S.) (S.) (S.) (S.) (S.)
CRYSTAL HILL (N.) JUNCTION (N.) (N.) (N.) (N.) (N.) (N.)
CRYSTAL HILL (S.) JUNCTION (S.) (S.) (S.) (S.) (S.) (S.)
CRYSTAL HILL (N.) JUNCTION (N.) (N.) (N.) (N.) (N.) (N.) (N.)
CRYSTAL HILL (S.) JUNCTION (S.) (S.) (S.) (S.) (S.) (S.) (S.)
CRYSTAL HILL (N.) JUNCTION (N.) (N.) (N.) (N.) (N.) (N.) (N.) (N.)
CRYSTAL HILL (S.) JUNCTION (S.) (S.) (S.) (S.) (S.) (S.) (S.) (S.)
CRYSTAL HILL (N.) JUNCTION (N.) (N.) (N.) (N.) (N.) (N.) (N.) (N.) (N.)
CRYSTAL HILL (S.) JUNCTION (S.) (S.) (S.) (S.) (S.) (S.) (S.) (S.) (S.)
CRYSTAL HILL (N.) JUNCTION (N.) (N.) (N.) (N.) (N.) (N.) (N.) (N.) (N.) (N.)
CRYSTAL HILL (S.) JUNCTION (S.) (S.) (S.) (S.) (S.) (S.) (S.) (S.) (S.) (S.)
CRYSTAL HILL (N.) JUNCTION (N.) (N.) (N.) (N.) (N.) (N.) (N.) (N.) (N.) (N.) (N.)
CRYSTAL HILL (S.) JUNCTION (S.) (S.) (S.) (S.) (S.) (S.) (S.) (S.) (S.) (S.) (S.)
CRYSTAL HILL (N.) JUNCTION (N.) (N.) (N.) (N.) (N.) (N.) (N.) (N.) (N.) (N.) (N.) (N.)
CRYSTAL HILL (S.) JUNCTION (S.) (S.) (S.) (S.) (S.) (S.) (S.) (S.) (S.) (S.) (S.) (S.)
CRYSTAL HILL (N.) JUNCTION (N.) (N.) (N.) (N.) (N.) (N.) (N.) (N.) (N.) (N.) (N.) (N.) (N.)
CRYSTAL HILL (S.) JUNCTION (S.) (S.) (S.) (S.) (S.) (S.) (S.) (S.) (S.) (S.) (S.) (S.) (S.)
CRYSTAL HILL (N.) JUNCTION (N.) (N.) (N.) (N.) (N.) (N.) (N.) (N.) (N.) (N.) (N.) (N.) (N.) (N.)
CRYSTAL HILL (S.) JUNCTION (S.) (S.) (S.) (S.) (S.) (S.) (S.) (S.) (S.) (S.) (S.) (S.) (S.) (S.)
CRYSTAL HILL (N.) JUNCTION (N.) (N.) (N.) (N.) (N.) (N.) (N.) (N.) (N.) (N.) (N.) (N.) (N.) (N.) (N.)
CRYSTAL HILL (S.) JUNCTION (S.) (S.) (S.) (S.) (S.) (S.) (S.) (S.) (S.) (S.) (S.) (S.) (S.) (S.) (S.)
CRYSTAL HILL (N.) JUNCTION (N.) (N.) (N.) (N.) (N.) (N.) (N.) (N.) (N.) (N.) (N.) (N.) (N.) (N.) (N.) (N.)
CRYSTAL HILL (S.) JUNCTION (S.) (S.) (S.) (S.) (S.) (S.) (S.) (S.) (S.) (S.) (S.) (S.) (S.) (S.) (S.) (S.)
CRYSTAL HILL (N.) JUNCTION (N.) (N.) (N.) (N.) (N.) (N.) (N.) (N.) (N.) (N.) (N.) (N.) (N.) (N.) (N.) (N.) (N.)
CRYSTAL HILL (S.) JUNCTION (S.) (S.) (S.) (S.) (S.) (S.) (S.) (S.) (S.) (S.) (S.) (S.) (S.) (S.) (S.) (S.) (S.)
CRYSTAL HILL (N.) JUNCTION (N.) (N.) (N.) (N.) (N.) (N.) (N.) (N.) (N.) (N.) (N.) (N.) (N.) (N.) (N.) (N.) (N.) (N.)
CRYSTAL HILL (S.) JUNCTION (S.) (S.) (S.) (S.) (S.) (S.) (S.) (S.) (S.) (S.) (S.) (S.) (S.) (S.) (S.) (S.) (S.) (S.)
CRYSTAL HILL (N.) JUNCTION (N.) (N.) (N.) (N.) (N.) (N.) (N.) (N.) (N.) (N.) (N.) (N.) (N.) (N.) (N.) (N.) (N.) (N.) (N.)
CRYSTAL HILL (S.) JUNCTION (S.) (S.) (S.) (S.) (S.) (S.) (S.) (S.) (S.) (S.) (S.) (S.) (S.) (S.) (S.) (S.) (S.) (S.) (S.)
CRYSTAL HILL (N.) JUNCTION (N.) (N.) (N.) (N.) (N.) (N.) (N.) (N.) (N.) (N.) (N.) (N.) (N.) (N.) (N.) (N.) (N.) (N.) (N.) (N.)
CRYSTAL HILL (S.) JUNCTION (S.) (S.) (S.) (S.) (S.) (S.) (S.) (S.) (S.) (S.) (S.) (S.) (S.) (S.) (S.) (S.) (S.) (S.) (S.) (S.)
CRYSTAL HILL (N.) JUNCTION (N.) (N.) (N.) (N.) (N.) (N.) (N.) (N.) (N.) (N.) (N.) (N.) (N.) (N.) (N.) (N.) (N.) (N.) (N.) (N.) (N.)
CRYSTAL HILL (S.) JUNCTION (S.) (S.) (S.) (S.) (S.) (S.) (S.) (S.) (S.) (S.) (S.) (S.) (S.) (S.) (S.) (S.) (S.) (S.) (S.) (S.) (S.)
CRYSTAL HILL (N.) JUNCTION (N.) (N.) (N.) (N.) (N.) (N.) (N.) (N.) (N.) (N.) (N.) (N.) (N.) (N.) (N.) (N.) (N.) (N.) (N.) (N.) (N.) (N.)
CRYSTAL HILL (S.) JUNCTION (S.) (S.) (S.) (S.) (S.) (S.) (S.) (S.) (S.) (S.) (S.) (S.) (S.) (S.) (S.) (S.) (S.) (S.) (S.) (S.) (S.) (S.)
CRYSTAL HILL (N.) JUNCTION (N.) (N.) (N.) (N.) (N.) (N.) (N.) (N.) (N.) (N.) (N.) (N.) (N.) (N.) (N.) (N.) (N.) (N.) (N.) (N.) (N.) (N.) (N.)
CRYSTAL HILL (S.) JUNCTION (S.) (S.) (S.) (S.) (S.) (S.) (S.) (S.) (S.) (S.) (S.) (S.) (S.) (S.) (S.) (S.) (S.) (S.) (S.) (S.) (S.) (S.) (S.)
CRYSTAL HILL (N.) JUNCTION (N.) (N.) (N.) (N.) (N.) (N.) (N.) (N.) (N.) (N.) (N.) (N.) (N.) (N.) (N.) (N.) (N.) (N.) (N.) (N.) (N.) (N.) (N.) (N.)
CRYSTAL HILL (S.) JUNCTION (S.) (S.) (S.) (S.) (S.) (S.) (S.) (S.) (S.) (S.) (S.) (S.) (S.) (S.) (S.) (S.) (S.) (S.) (S.) (S.) (S.) (S.) (S.) (S.)
CRYSTAL HILL (N.) JUNCTION (N.) (N.) (N.) (N.) (N.) (N.) (N.) (N.) (N.) (N.) (N.) (N.) (N.) (N.) (N.) (N.) (N.) (N.) (N.) (N.) (N.) (N.) (N.) (N.) (N.)
CRYSTAL HILL (S.) JUNCTION (S.) (S.) (S.) (S.) (S.) (S.) (S.) (S.) (S.) (S.) (S.) (S.) (S.) (S.) (S.) (S.) (S.) (S.) (S.) (S.) (S.) (S.) (S.) (S.) (S.)
CRYSTAL HILL (N.) JUNCTION (N.) (N.) (N.) (N.) (N.) (N.) (N.) (N.) (N.) (N.) (N.) (N.) (N.) (N.) (N.) (N.) (N.) (N.) (N.) (N.) (N.) (N.) (N.) (N.) (N.) (N.)
CRYSTAL HILL (S.) JUNCTION (S.) (S.) (S.) (S.) (S.) (S.) (S.) (S.) (S.) (S.) (S.) (S.) (S.) (S.) (S.) (S.) (S.) (S.) (S.) (S.) (S.) (S.) (S.) (S.) (S.) (S.)
CRYSTAL HILL (N.) JUNCTION (N.) (N.) (N.) (N.) (N.) (N.) (N.) (N.) (N.) (N.) (N.) (N.) (N.) (N.) (N.) (N.) (N.) (N.) (N.) (N.) (N.) (N.) (N.) (N.) (N.) (N.) (N.)
CRYSTAL HILL (S.) JUNCTION (S.) (S.) (S.) (S.) (S.) (S.) (S.) (S.) (S.) (S.) (S.) (S.) (S.) (S.) (S.) (S.) (S.) (S.) (S.) (S.) (S.) (S.) (S.) (S.) (S.) (S.) (S.)
CRYSTAL HILL (N.) JUNCTION (N.) (N.) (N.) (N.) (N.) (N.) (N.) (N.) (N.) (N.) (N.) (N.) (N.) (N.) (N.) (N.) (N.) (N.) (N.) (N.) (N.) (N.) (N.) (N.) (N.) (N.) (N.) (N.)
CRYSTAL HILL (S.) JUNCTION (S.) (S.) (S.) (S.) (S.) (S.) (S.) (S.) (S.) (S.) (S.) (S.) (S.) (S.) (S.) (S.) (S.) (S.) (S.) (S.) (S.) (S.) (S.) (S.) (S.) (S.) (S.) (S.)
CRYSTAL HILL (N.) JUNCTION (N.) (N.) (N.) (N.) (N.) (N.) (N.) (N.) (N.) (N.) (N.) (N.) (N.) (N.) (N.) (N.) (N.) (N.) (N.) (N.) (N.) (N.) (N.) (N.) (N.) (N.) (N.) (N.) (N.)
CRYSTAL HILL (S.) JUNCTION (S.) (S.) (S.) (S.) (S.) (S.) (S.) (S.) (S.) (S.) (S.) (S.) (S.) (S.) (S.) (S.) (S.) (S.) (S.) (S.) (S.) (S.) (S.) (S.) (S.) (S.) (S.) (S.) (S.)
CRYSTAL HILL (N.) JUNCTION (N.) (N.) (N.) (N.) (N.) (N.) (N.) (N.) (N.) (N.) (N.) (N.) (N.) (N.) (N.) (N.) (N.) (N.) (N.) (N.) (N.) (N.) (N.) (N.) (N.) (N.) (N.) (N.) (N.) (N.)
CRYSTAL HILL (S.) JUNCTION (S.) (S.) (S.) (S.) (S.) (S.) (S.) (S.) (S.) (S.) (S.) (S.) (S.) (S.) (S.) (S.) (S.) (S.) (S.) (S.) (S.) (S.) (S.) (S.) (S.) (S.) (S.) (S.) (S.) (S.)
CRYSTAL HILL (N.) JUNCTION (N.) (N.) (N.) (N.) (N.) (N.) (N.) (N.) (N.) (N.) (N.) (N.) (N.) (N.) (N.) (N.) (N.) (N.) (N.) (N.) (N.) (N.) (N.) (N.) (N.) (N.) (N.) (N.) (N.) (N.) (N.)
CRYSTAL HILL (S.) JUNCTION (S.) (S.) (S.) (S.) (S.) (S.) (S.) (S.) (S.) (S.) (S.) (S.) (S.) (S.) (S.) (S.) (S.) (S.) (S.) (S.) (S.) (S.) (S.) (S.) (S.) (S.) (S.) (S.) (S.) (S.) (S.)
CRYSTAL HILL (N.) JUNCTION (N.) (N.) (N.) (N.) (N.) (N.) (N.) (N.) (N.) (N.) (N.) (N.) (N.) (N.) (N.) (N.) (N.) (N.) (N.) (N.) (N.) (N.) (N.) (N.) (N.) (N.) (N.) (N.) (N.) (N.) (N.) (N.)
CRYSTAL HILL (S.) JUNCTION (S.) (S.) (S.) (S.) (S.) (S.) (S.) (S.) (S.) (S.) (S.) (S.) (S.) (S.) (S.) (S.) (S.) (S.) (S.) (S.) (S.) (S.) (S.) (S.) (S.) (S.) (S.) (S.) (S.) (S.) (S.) (S.)
CRYSTAL HILL (N.) JUNCTION (N.) (N.) (N.) (N.) (N.) (N.) (N.) (N.) (N.) (N.) (N.) (N.) (N.) (N.) (N.) (N.) (N.) (N.) (N.) (N.) (N.) (N.) (N.) (N.) (N.) (N.) (N.) (N.) (N.) (N.) (N.) (N.) (N.)
CRYSTAL HILL (S.) JUNCTION (S.) (S.) (S.) (S.) (S.) (S.) (S.) (S.) (S.) (S.) (S.) (S.) (S.) (S.) (S.) (S.) (S.) (S.) (S.) (S.) (S.) (S.) (S.) (S.) (S.) (S.) (S.) (S.) (S.) (S.) (S.) (S.) (S.)
CRYSTAL HILL (N.) JUNCTION (N.) (N.) (N.) (N.) (N.) (N.) (N.) (N.) (N.) (N.) (N.) (N.) (N.) (N.) (N.) (N.) (N.) (N.) (N.) (N.) (N.) (N.) (N.) (N.) (N.) (N.) (N.) (N.) (N.) (N.) (N.) (N.) (N.) (N.)
CRYSTAL HILL (S.) JUNCTION (S.) (S.) (S.) (S.) (S.) (S.) (S.) (S.) (S.) (S.) (S.) (S.) (S.) (S.) (S.) (S.) (S.) (S.) (S.) (S.) (S.) (S.) (S.) (S.) (S.) (S.) (S.) (S.) (S.) (S.) (S.) (S.) (S.) (S.)
CRYSTAL HILL (N.) JUNCTION (N.) (N.) (N.) (N.) (N.) (N.) (N.) (N.) (N.) (N.) (N.) (N.) (N.) (N.) (N.) (N.) (N.) (N.) (N.) (N.) (N.) (N.) (N.) (N.) (N.) (N.) (N.) (N.) (N.) (N.) (N.) (N.) (N.) (N.) (N.)
CRYSTAL HILL (S.) JUNCTION (S.) (S.) (S.) (S.) (S.) (S.) (S.) (S.) (S.) (S.) (S.) (S.) (S.) (S.) (S.) (S.) (S.) (S.) (S.) (S.) (S.) (S.) (S.) (S.) (S.) (S.) (S.) (S.) (S.) (S.) (S.) (S.) (S.) (S.) (S.)
CRYSTAL HILL (N.) JUNCTION (N.) (N.) (N.) (N.) (N.) (N.) (N.) (N.) (N.) (N.) (N.) (N.) (N.) (N.) (N.) (N.) (N.) (N.) (N.) (N.) (N.) (N.) (N.) (N.) (N.) (N.) (N.) (N.) (N.) (N.) (N.) (N.) (N.) (N.) (N.) (N.)
CRYSTAL HILL (S.) JUNCTION (S.) (S.) (S.) (S.) (S.) (S.) (S.) (S.) (S.) (S.) (S.) (S.) (S.) (S.) (S.) (S.) (S.) (S.) (S.) (S.) (S.) (S.) (S.) (S.) (S.) (S.) (S.) (S.) (S.) (S.) (S.) (S.) (S.) (S.) (S.) (S.)
CRYSTAL HILL (N.) JUNCTION (N.) (N.) (N.) (N.) (N.) (N.) (N.) (N.) (N.) (N.) (N.) (N.) (N.) (N.) (N.) (N.) (N.) (N.) (N.) (N.) (N.) (N.) (N.) (N.) (N.) (N.) (N.) (N.) (N.) (N.) (N.) (N.) (N.) (N.) (N.) (N.) (N.)
CRYSTAL HILL (S.) JUNCTION (S.) (S.) (S.) (S.) (S.) (S.) (S.) (S.) (S.) (S.) (S.) (S.) (S.) (S.) (S.) (S.) (S.) (S.) (S.) (S.) (S.) (S.) (S.) (S.) (S.) (S.) (S.) (S.) (S.) (S.) (S.) (S.) (S.) (S.) (S.) (S.) (S.)
CRYSTAL HILL (N.) JUNCTION (N.) (N.) (N.) (N.) (N.) (N.) (N.) (N.) (N.) (N.) (N.) (N.) (N.) (N.) (N.) (N.) (N.) (N.) (N.) (N.) (N.) (N.) (N.) (N.) (N.) (N.) (N.) (N.) (N.) (N.) (N.) (N.) (N.) (N.) (N.) (N.) (N.) (N.)
CRYSTAL HILL (S.) JUNCTION (S.) (S.) (S.) (S.) (S.) (S.) (S.) (S.) (S.) (S.) (S.) (S.) (S.) (S.) (S.) (S.) (S.) (S.) (S.) (S.) (S.) (S.) (S.) (S.) (S.) (S.) (S.) (S.) (S.) (S.) (S.) (S.) (S.) (S.) (S.) (S.) (S.) (S.)
CRYSTAL HILL (N.) JUNCTION (N.)

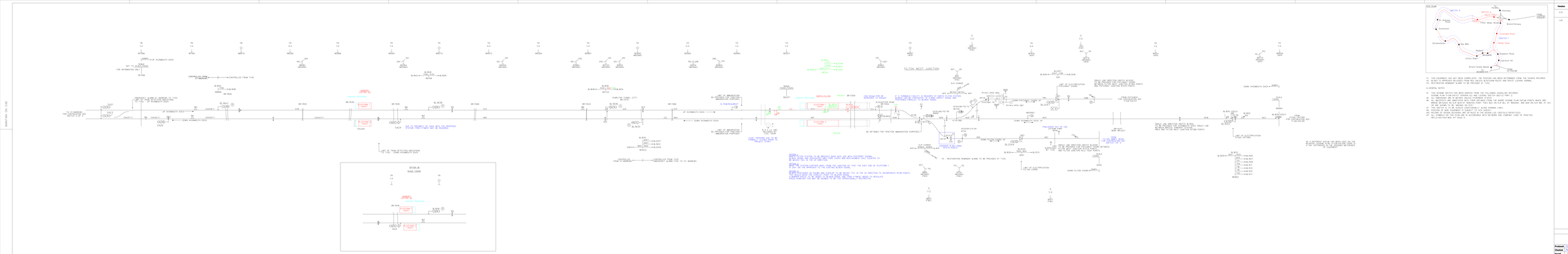
FILTON WEST JUNCTION
DOWN AVONMOUTH DOCK
UP AVONMOUTH DOCK
CONTROLLED FROM TVSC
CONTROLLED FROM FILTON WEST JUNCTION
TO ST ANDREWS (FOR DETAILS SEE SECTION 'J' OF SCHEME)
DUE TO PROXIMITY OF YARD WITH THE PROPOSED STIGGINS PATH PARKING MAY BE ALLOWED
BL RETAINED FOR TRACTION INAUGURATION PURPOSES
SCALE 1:1000
SCALE 1:2000
SECTION 'A'
SECTION 'B'
SECTION 'C'
SECTION 'D'
SECTION 'E'
SECTION 'F'
SECTION 'G'
SECTION 'H'
SECTION 'J'
SECTION 'K'
SECTION 'L'
SECTION 'M'
SECTION 'N'
SECTION 'P'
SECTION 'Q'
SECTION 'R'
SECTION 'S'
SECTION 'T'
SECTION 'U'
SECTION 'V'
SECTION 'W'
SECTION 'X'
SECTION 'Y'
SECTION 'Z'
Pathway
Footpath
Cliffton Mews Bridge
Stoke Park Road
Aluminium
Shrubbery
Bus Bay
Footpath
Cliffton Road
Bristol Temple Meads
Cleveland PB
Cleveland Road
Stoke Park
Grampian Road
Cleveland Road
Stoke Park
Footpath
Pathway
Footpath
Pathway
Footpath
Pathway

NetworkRail

Signalling Design Group

Hallen Marsh Jcn: Option 1.1

URS proposal based on Capability Analysis

Ref	SDG/SSK/139797/GS4/3A
Issue	3.00
Date	02.12.14

Pros:
Parallel move onto departure line.
Route from SA32 onto single line.
Cons:
Reduced standage in terminal.

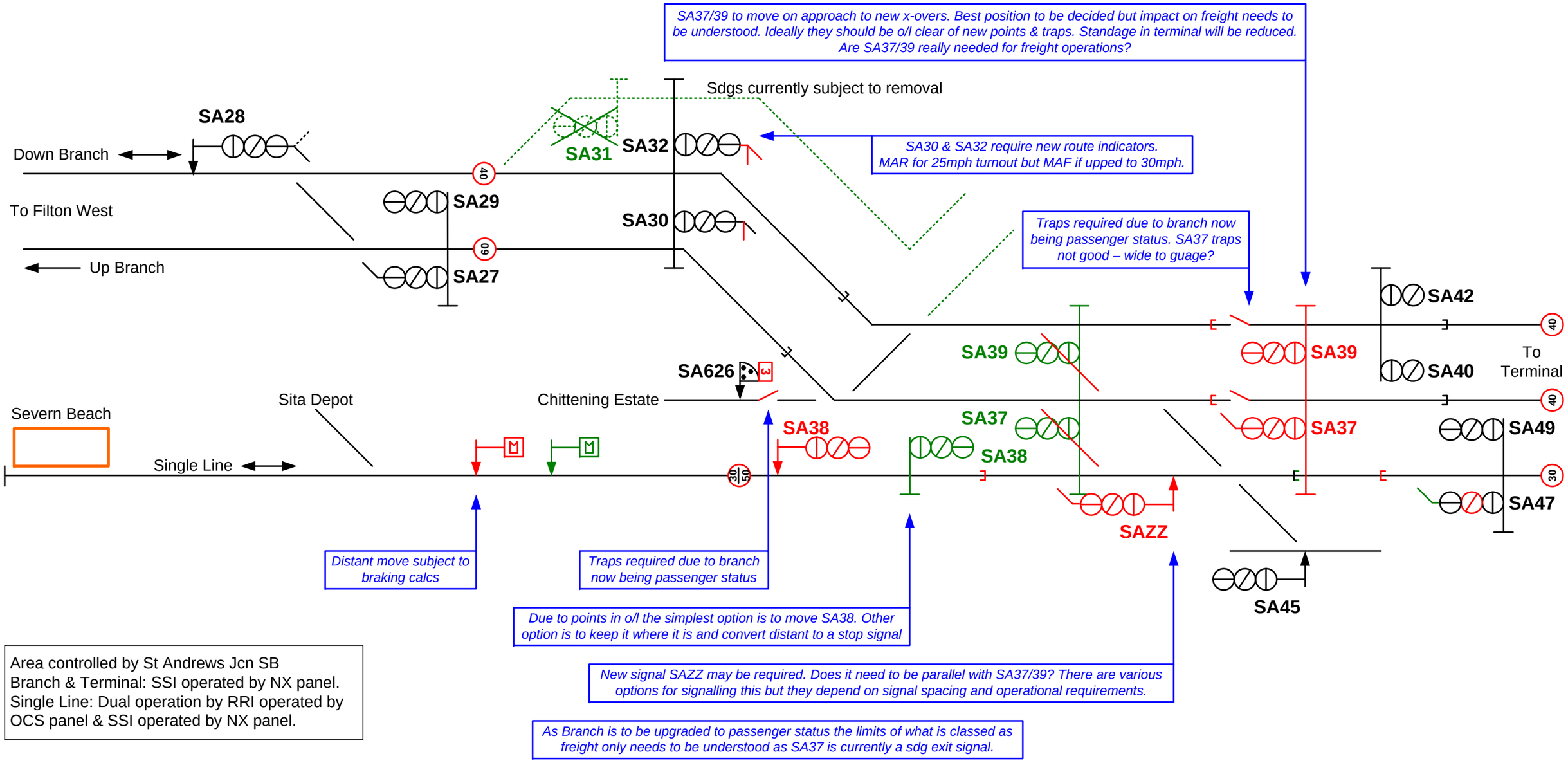

Area controlled by St Andrews Jcn SB
Branch & Terminal: SSI operated by NX panel.
Single Line: Dual operation by RRI operated by OCS panel & SSI operated by NX panel.

Not to scale.
Reduced detail shown.

Produced	T. Jordan
Checked	

NetworkRail

Signalling Design Group

Hallen Marsh Jcn: Option 1.2

Revised URS proposal based on Capability Analysis

Ref	SDG/SSK/139797/GS4/3B
Issue	2.00
Date	02.12.14

Pros:
Route from SA32 onto single line.
Cons:
No parallel move onto departure line.

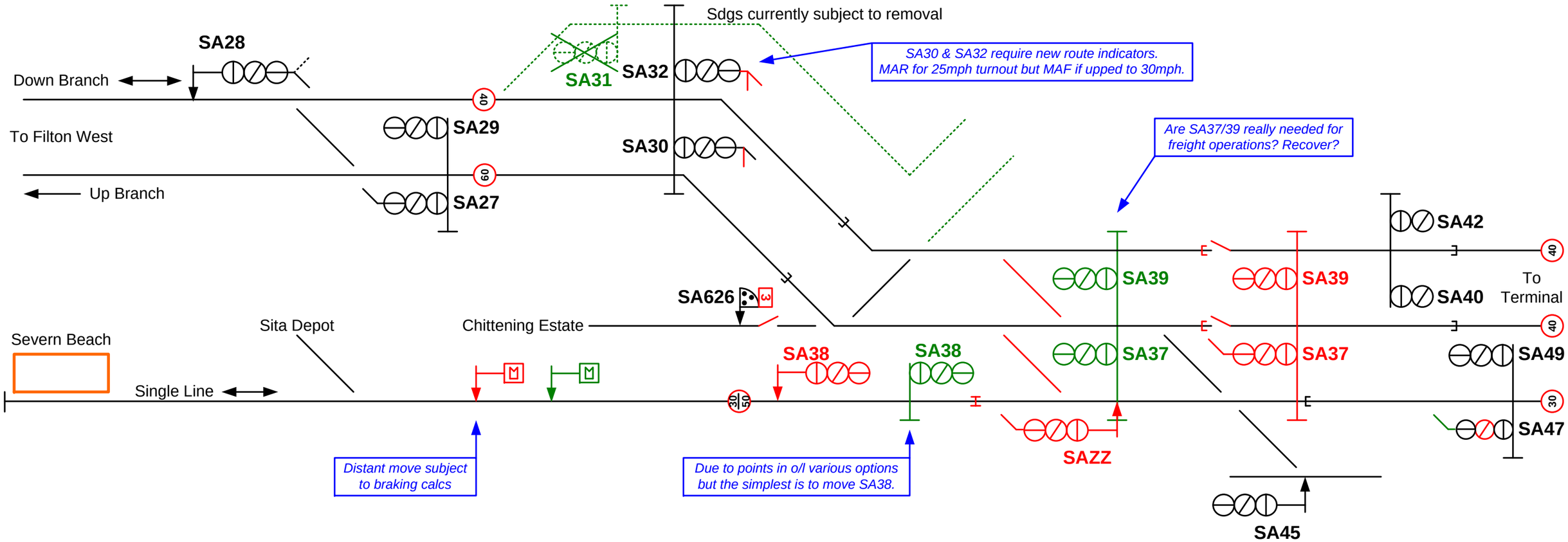

Area controlled by St Andrews Jcn SB
Branch & Terminal: SSI operated by NX panel.
Single Line: Dual operation by RRI operated by
OCS panel & SSI operated by NX panel.

As Branch is to be upgraded to passenger status the limits of what is classed as freight only needs to be understood as SA37 is currently a sdg exit signal.

Not to scale.
Reduced detail shown.

Produced	T. Jordan
Checked	

NetworkRail

Signalling Design Group

Hallen Marsh Jcn: Option 1.3

SDG proposal

Ref	SDG/SSK/139797/GS4/3C
Issue	2.00
Date	02.12.14

Pros:
Route from SA32 onto single line.
Cons:
No parallel move onto departure line.
Reduced standage in terminal.

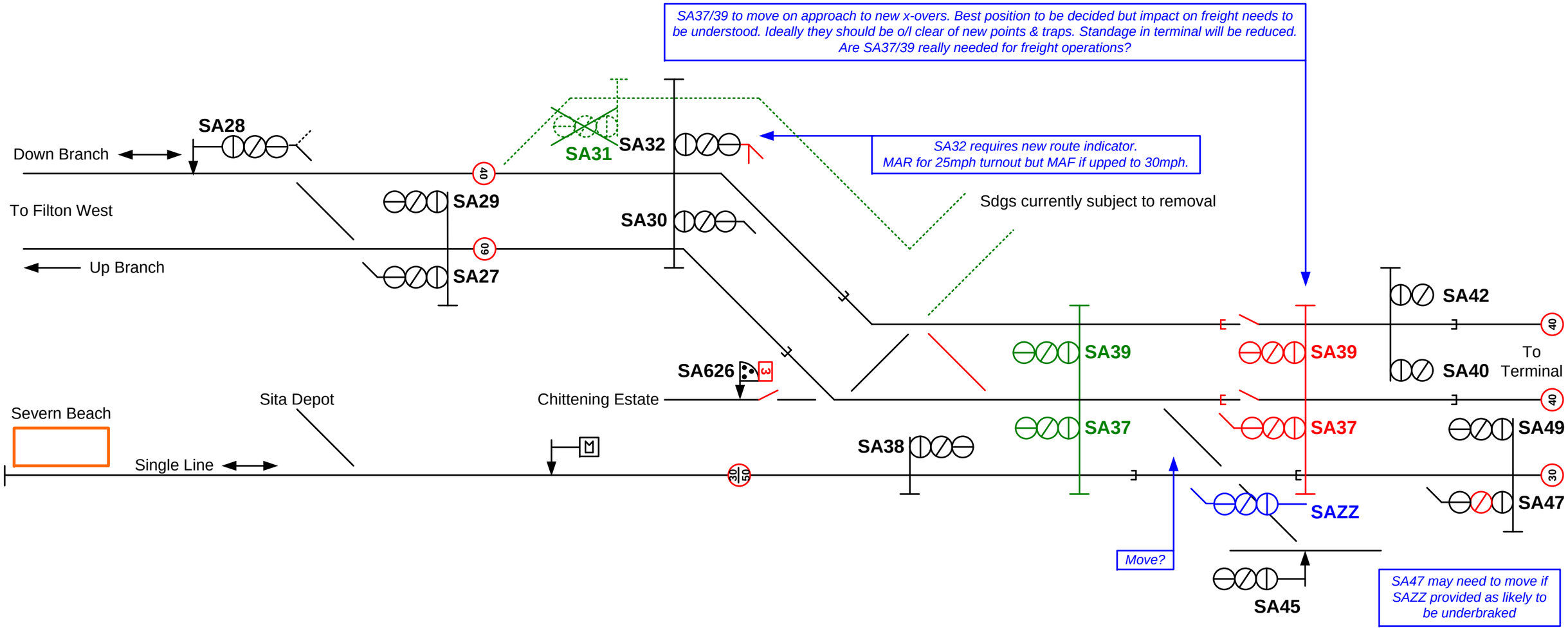

Area controlled by St Andrews Jcn SB
Branch & Terminal: SSI operated by NX panel.
Single Line: Dual operation by RRI operated by OCS panel & SSI operated by NX panel.

As Branch is to be upgraded to passenger status the limits of what is classed as freight only needs to be understood as SA37 is currently a sdg exit signal.

Not to scale.
Reduced detail shown.

Produced	T. Jordan
Checked	

NetworkRail

Signalling Design Group

Hallen Marsh Jcn: Option 1.4

SDG proposal

Ref	SDG/SSK/139797/GS4/3D
Issue	2.00
Date	02.12.14

Pros:
Route from SA32 onto single line.
Cons:
No parallel move onto departure line.
Reduced standage in terminal.

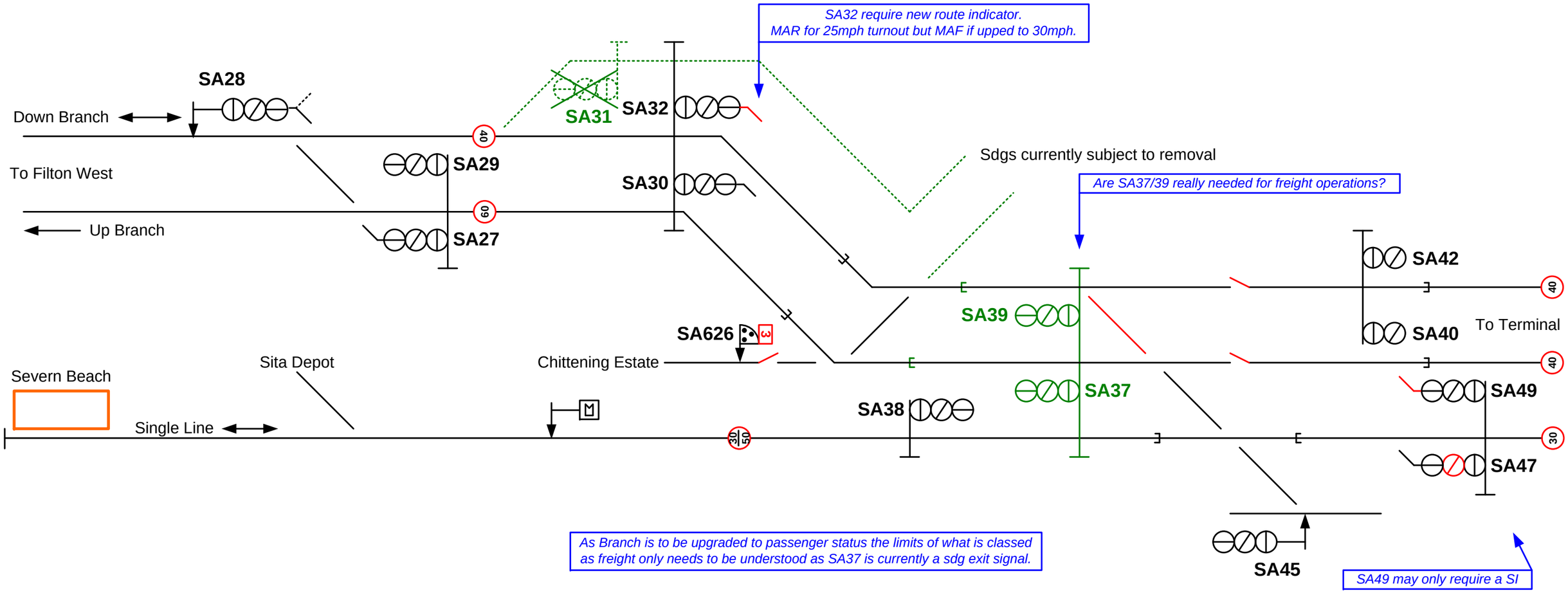

Area controlled by St Andrews Jcn SB
Branch & Terminal: SSI operated by NX panel.
Single Line: Dual operation by RRI operated by OCS panel & SSI operated by NX panel.

Not to scale.
Reduced detail shown.

Produced	T. Jordan
Checked	

NetworkRail

Signalling Design Group

Hallen Marsh Jcn: Option 1.5

SDG proposal

Ref	SDG/SSK/139797/GS4/3E
Issue	1.00
Date	02.12.14

Pros:
Parallel move onto departure line.
Route from SA32 onto single line.
Cons:
Lose route from SA626 onto arrival line.

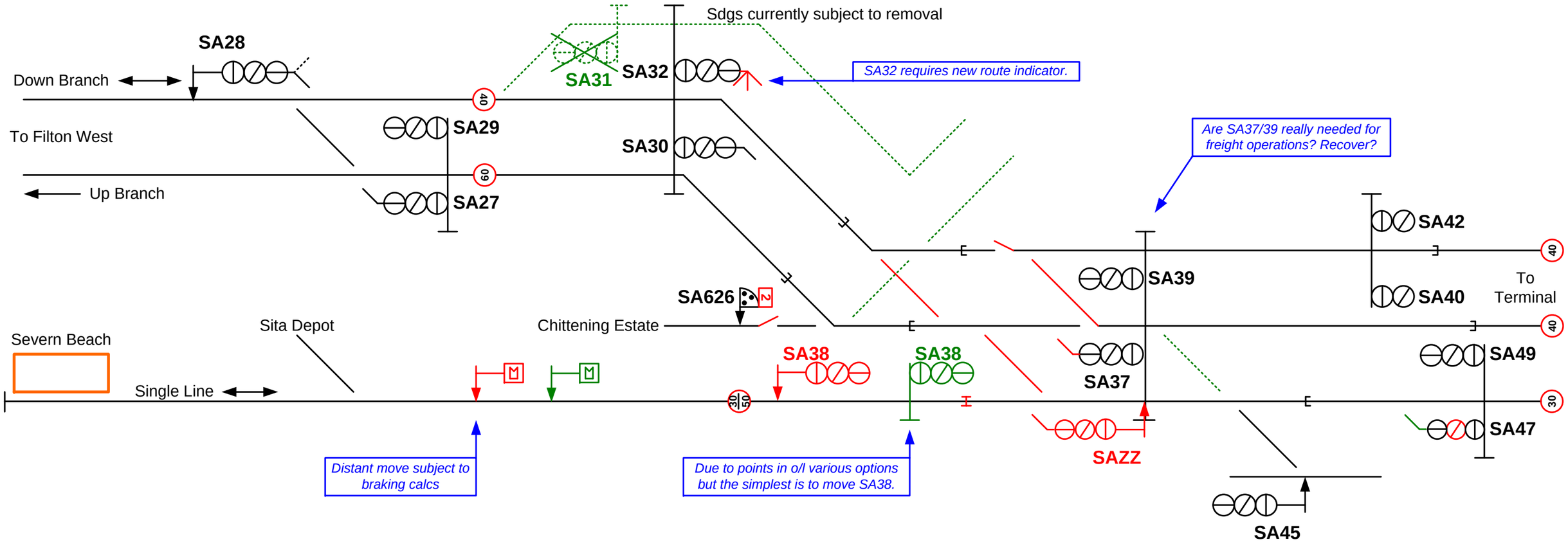

Area controlled by St Andrews Jcn SB
Branch & Terminal: SSI operated by NX panel.
Single Line: Dual operation by RRI operated by OCS panel & SSI operated by NX panel.

Not to scale.
Reduced detail shown.

Produced	T. Jordan
Checked	

NetworkRail

Signalling Design Group

Hallen Marsh Jcn: Option 1.6

SDG proposal

Ref	SDG/SSK/139797/GS4/3F
Issue	1.00
Date	02.12.14

Pros:
Route from SA32 onto single line.
Freight can be kept clear of the jcn.
Cons:
Lose route from SA626 onto arrival line.
Costly & utlises OOU infrastructure.

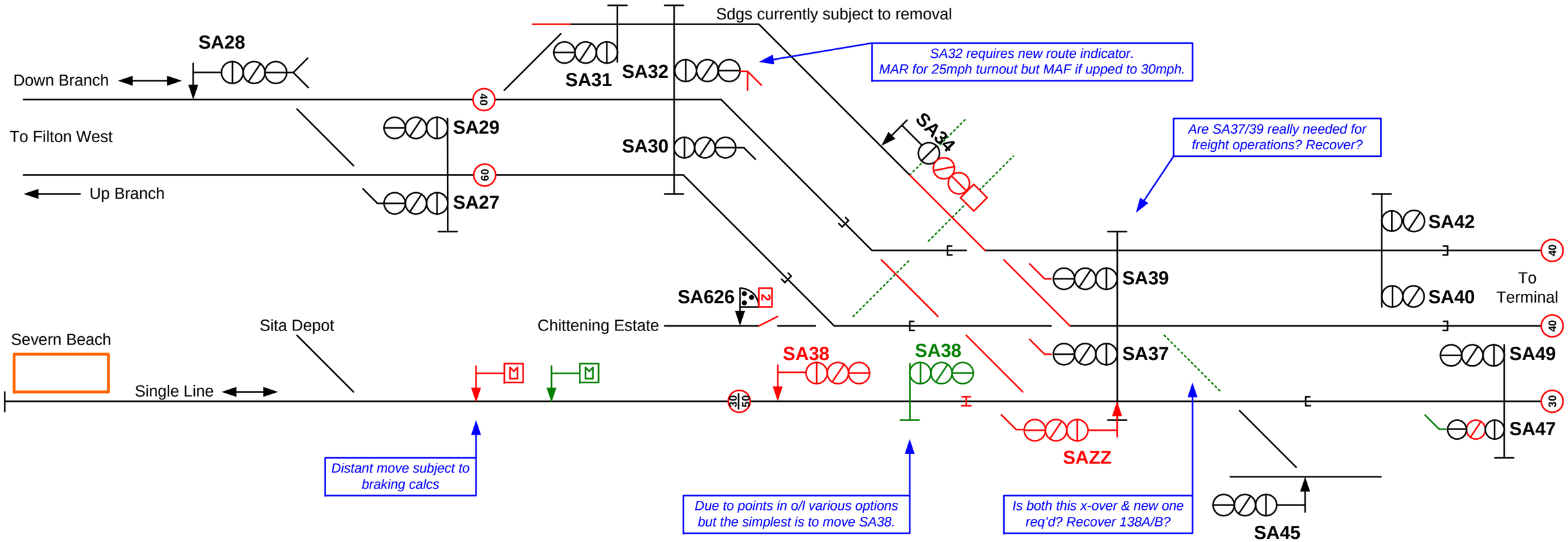

Area controlled by St Andrews Jcn SB
Branch & Terminal: SSI operated by NX panel.
Single Line: Dual operation by RRI operated by OCS panel & SSI operated by NX panel.

Not to scale.
Reduced detail shown.

Produced	T. Jordan
Checked	

NetworkRail

Signalling Design Group

Hallen Marsh Jcn: Option 2.1

Alternative SDG proposal based on Toby Hetherington's feedback

Ref	SDG/SSK/139797/GS4/3G
Issue	2.00
Date	04.12.14

Pros:
Parallel move onto departure line.
Parallel move between SA47-SA39 & SA45-SA37
Route from SA32 onto single line.
Allows move from SA45 with single line occ.
Cons:
Reduced standage in terminal.

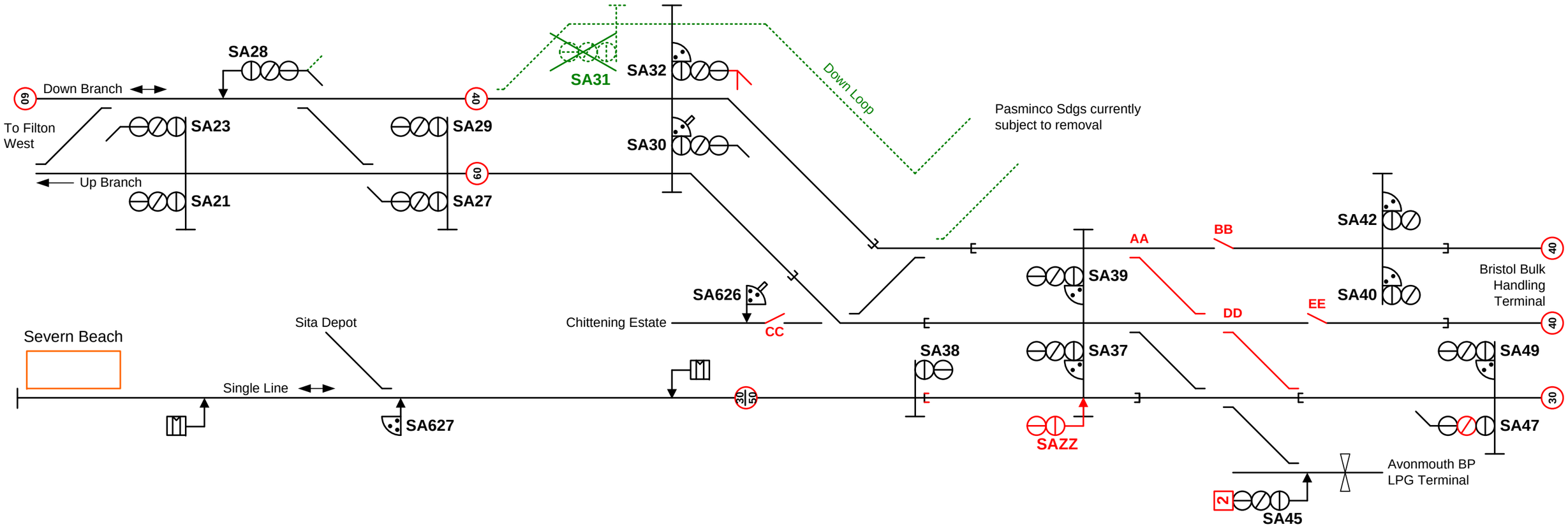

Area controlled by St Andrews Jcn SB
Branch & Terminal: SSI operated by NX panel.
Single Line: Dual operation by RRI operated by OCS panel & SSI operated by NX panel.

Single line controls to be reviewed. Propose it is worked to OTW (tokenless) regs using sequential TC to allow Holesmouth Jcn to be used – see GK/RT0055. Box instruction to be amended.

Not to scale.
Reduced detail shown.

Produced	T. Jordan	
Checked		

NetworkRail

Signalling Design Group

Hallen Marsh Jcn: Option 2.2

Alternative SDG proposal based on Toby Hetherington's feedback

Ref	SDG/SSK/139797/GS4/3H
Issue	1.00
Date	04.12.14

Pros:
Parallel move onto departure line.
Parallel move between SA47-SA37 & SA45-SAZZ
Route from SA32 onto single line.
Allows move from SA45 with single line occ.
Cons:
Reduced standage in terminal.

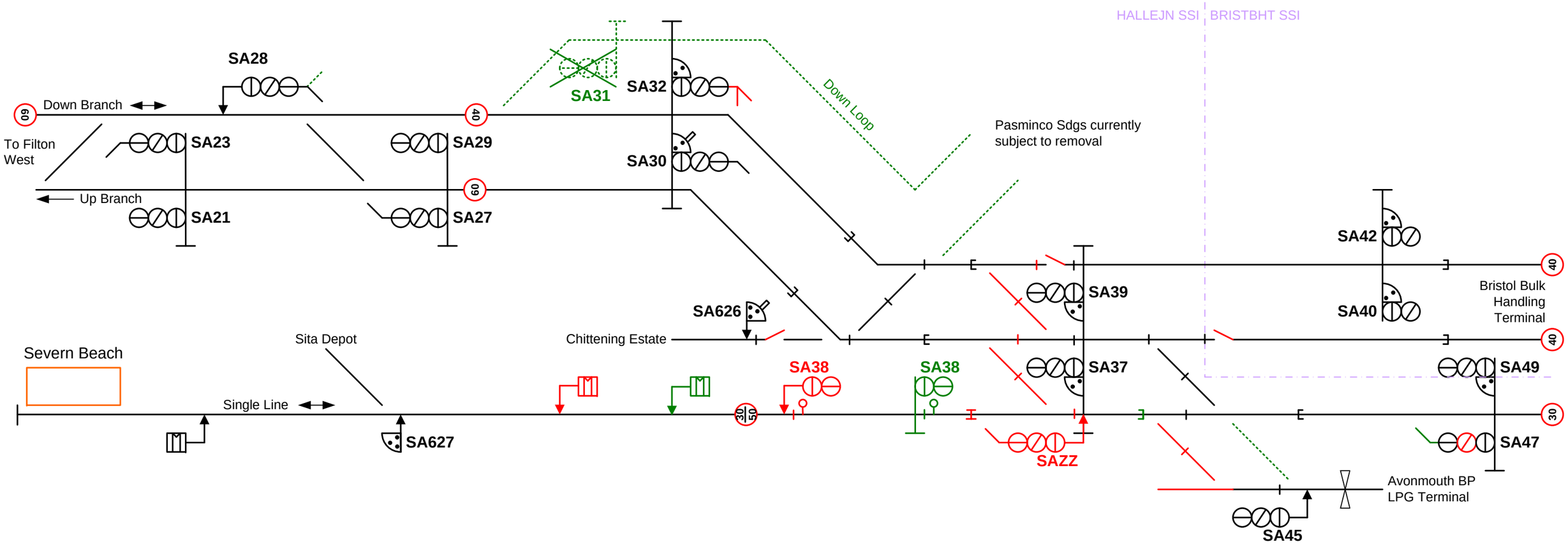

Area controlled by St Andrews Jcn SB
Branch & Terminal: SSI operated by NX panel.
Single Line: Dual operation by RRI via OCS panel & SSI via NX panel.

Single line working controls to be reviewed. Propose it is worked to OTW (tokenless) regs using sequential TC to allow Holesmouth Jcn to be used once a train is proven to have passed SA38 – see GK/RT0055. Box instruction to be amended.

Not to scale.
Reduced detail shown.

Produced	T. Jordan	
Checked		

NetworkRail

Signalling Design Group

Hallen Marsh Jcn: Option 2.3

Alternative SDG proposal based on Toby Hetherington's feedback

Ref	SDG/SSK/139797/GS4/3J
Issue	2.00
Date	09.12.14

Pros:
Parallel move onto departure line.
Parallel move between SAZZ-SA29 & SA45-SA27
Route from SA32 onto single line.
Allows move from SA45 with single line occ.
Segregates passenger & freight.
Cons:
Costly.
Lose route from SA626 onto arrival line.

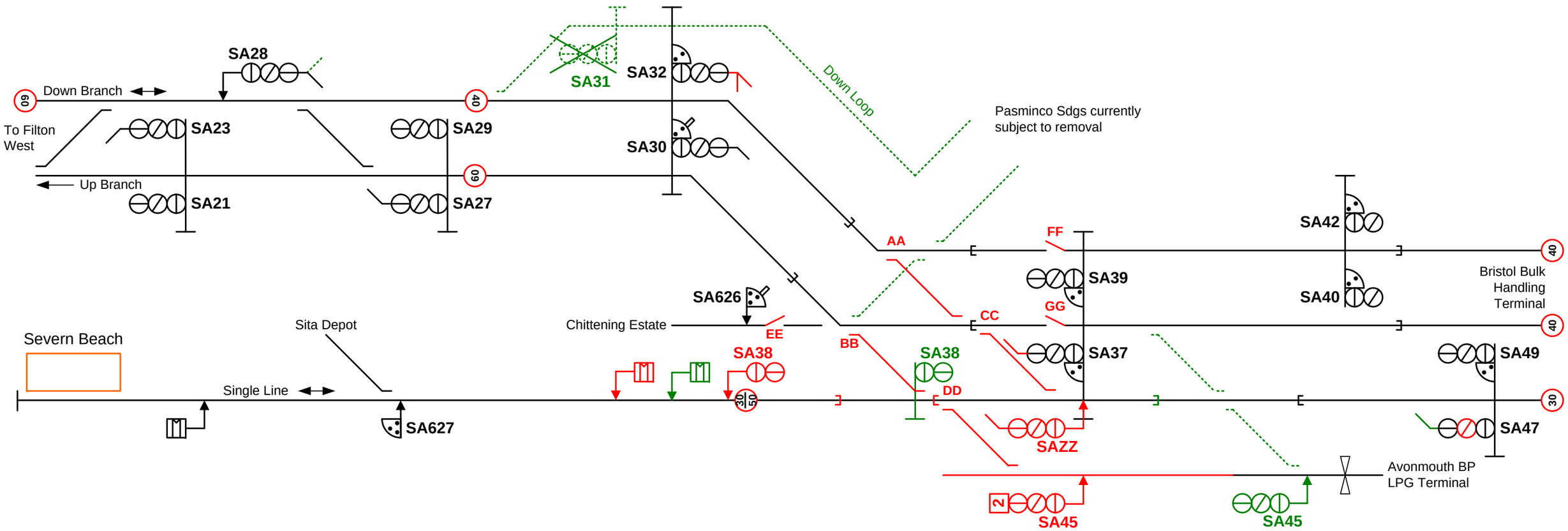

Area controlled by St Andrews Jcn SB
Branch & Terminal: SSI operated by NX panel.
Single Line: Dual operation by RRI operated by OCS panel & SSI operated by NX panel.

Single line controls to be reviewed. Propose it is worked to OTW (tokenless) regs using sequential TC to allow Holesmouth Jcn to be used – see GK/RT0055. Box instruction to be amended.

Not to scale.
Reduced detail shown.

Produced	T. Jordan	
Checked		

NetworkRail

Signalling Design Group

Hallen Marsh Jcn: Option 2.4

Alternative SDG proposal based on Toby Hetherington's feedback

Ref	SDG/SSK/139797/GS4/3K
Issue	1.00
Date	09.12.14

Pros:
Parallel move onto departure line.
Parallel move between SA47-SA37 & SA45-SAZZ
Route from SA32 onto single line.
Allows move from SA45 with single line occ.
Cons:
Reduced standage in terminal.

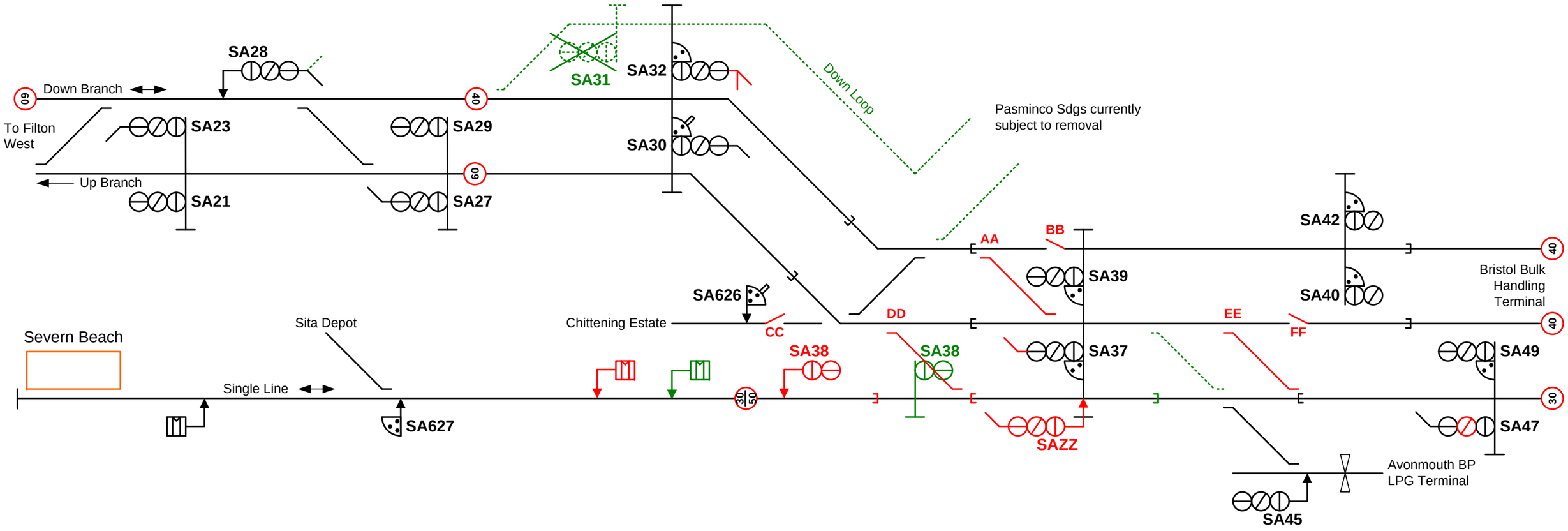

Area controlled by St Andrews Jcn SB
Branch & Terminal: SSI operated by NX panel.
Single Line: Dual operation by RRI operated by OCS panel & SSI operated by NX panel.

Single line controls to be reviewed. Propose it is worked to OTW (tokenless) regs using sequential TC to allow Holesmouth Jcn to be used – see GK/RT0055. Box instruction to be amended.

Not to scale.
Reduced detail shown.

Produced	T. Jordan	
Checked		

NetworkRail

Signalling Design Group

Hallen Marsh Jcn: Option 2.5

Alternative SDG proposal based on Toby Hetherington's feedback

Ref	SDG/SSK/139797/GS4/3L
Issue	1.00
Date	09.12.14

Pros:
Parallel move onto departure line.
Parallel move between SAZZ-SA29 & SA45-SA27
Route from SA32 onto single line.
Allows move from SA45 with single line occ.
Segregates passenger & freight.
Avoids freight blocking jcn.
Traps built into layout.
Cons:
Costly.
Lose route from SA626 onto arrival line.

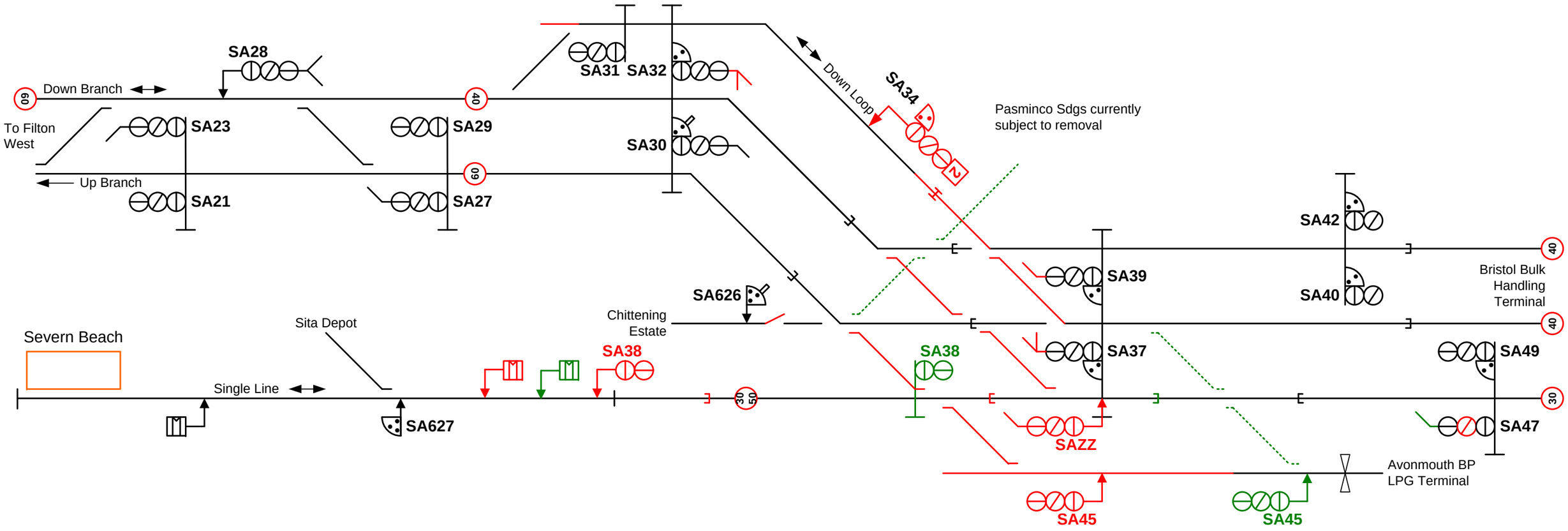

Area controlled by St Andrews Jcn SB
Branch & Terminal: SSI operated by NX panel.
Single Line: Dual operation by RRI operated by OCS panel & SSI operated by NX panel.

Single line controls to be reviewed. Propose it is worked to OTW (tokenless) regs using sequential TC to allow Holesmouth Jcn to be used – see GK/RT0055. Box instruction to be amended.

Not to scale.
Reduced detail shown.

Produced	T. Jordan	
Checked		

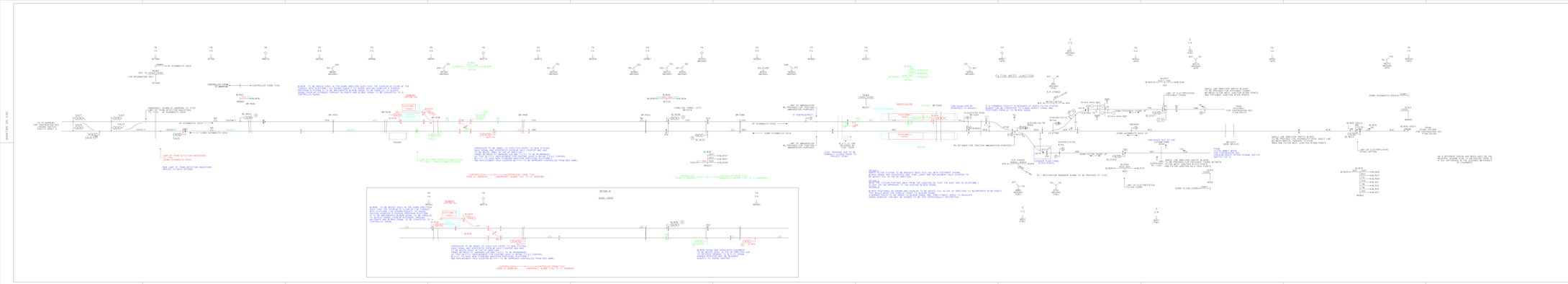

Version	Description of Amendment	Issue Record Approved Date	Approved	Date
0.01	INITIAL DRAFT.	01/12/14		
0.02	CHANGES TO TRACK & SIGNAL ARRANGEMENTS AROUND UP AVONMOUTH & UP ANDOVER.	10/12/14		
1.00	FIRST ISSUE.	08/01/15		

The copy is only printed at some point in time but is fitted - Only

National Records Group

THAMES VALLEY S.C.
WATERWEST PHASE 2
GRP STAGE 2
FILTON WEST JUNCTION SCHEME SKETCH

Drawing No: 1007/1000/A

Prepared: 01/12/14 Checked: 10/12/14 Issued: 08/01/15 Drawn: Checked: Issued: DB No.:

Last Mod. Date: Last Mod. By: Issue Date: 09/07/2015

Scale: 1:1000 Sheet: 1 of 1

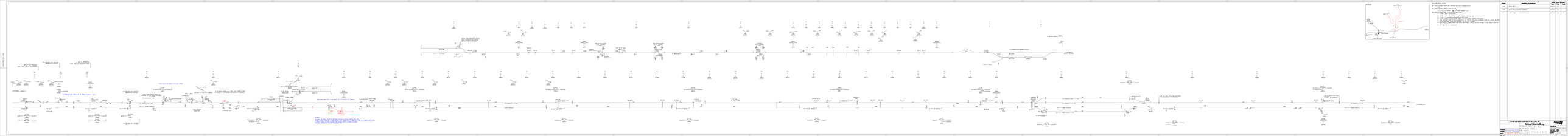
CONTROL DIV. 1000
CONNECTION AGREEMENT
TRANSMISSION
DISTRIBUTION
GENERATION

NetworkRail

Signalling Design Group

Hallen Marsh Jcn: Option 2.2

Alternative SDG proposal based on Toby Hetherington's feedback

Ref	SDG/SSK/139797/GS4/3H
Issue	1.00
Date	04.12.14

Pros:
Parallel move onto departure line.
Parallel move between SA47-SA37 & SA45-SAZZ
Route from SA32 onto single line.
Allows move from SA45 with single line occ.
Cons:
Reduced standage in terminal.

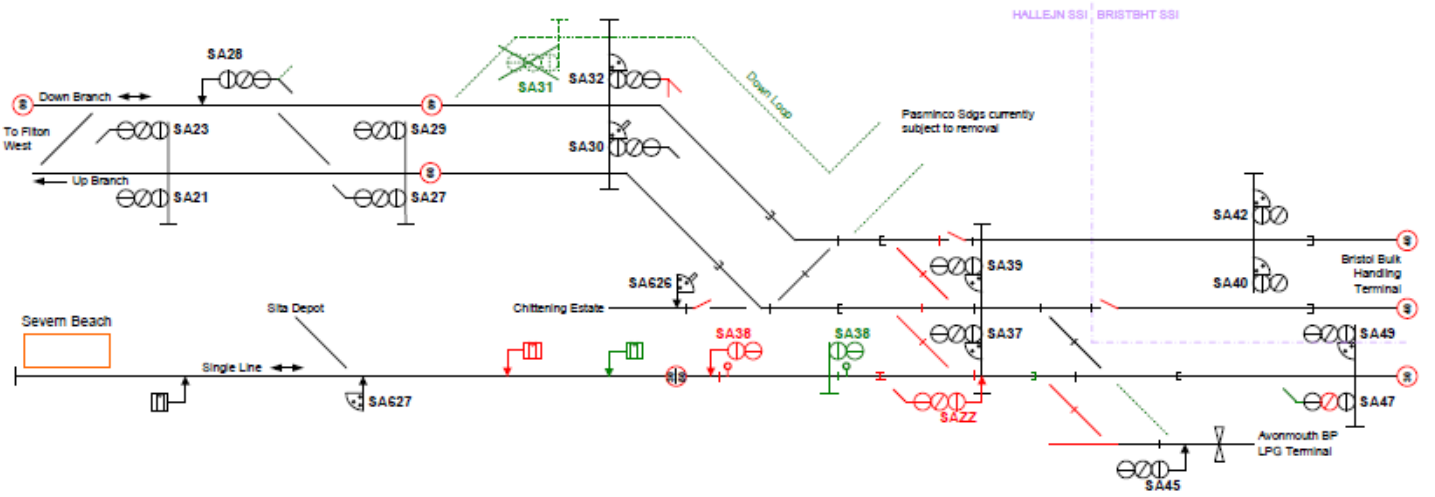

Area controlled by St Andrews Jcn SB
Branch & Terminal: SSI operated by NX panel.
Single Line: Dual operation by RRI via OCS panel & SSI via NX panel.

Single line working controls to be reviewed. Propose it is worked to OTW (tokenless) regs using sequential TC to allow Holesmouth Jcn to be used once a train is proven to have passed SA35 – see GK/RT0066. Box instruction to be amended.

Not to scale.
Reduced detail shown.

Produced	T. Jordan	
Checked		